SUZUKI

Way of Life!

2016 GENUINE RIGGING-PARTS AND ACCESSORIES

Revised Edition

Discover the Ultimate Marine Experience with Suzuki Outboards

THE ULTIMATE 4-STROKE OUTBOARD

50 years of Suzuki outboards

1965

Our first outboard, the D55, launched.

1980

DT85/115/140 OI

We first invented oil injection for outboards, and introduced oil injection series DT85OI, DT115OI and DT140OI.

1987

DT200 Exanté

DT200 Exanté wins the first "Most Innovative Products" award from the National Marine Manufactures association (NMMA).

1994

DF9.9/15

Introduction of DF9.9 and DF15, our first four stroke outboards.

1997

DF60/70

DF60 and DF70, the first Suzuki 4-stroke outboards with Electronic Fuel Injection System, marketed.

Looking back over the years as we celebrate our 50th anniversary in 2015, one thing that remains the same at Suzuki Outboard Motors is our passion for challenge. Every person in our outboard motor enterprise, from those involved in developing technologies and production to those in sales and service, is deeply interested in what our customers desire from their outboard motors. Feedback from our customers is one of the driving forces that leads us in pursuit of ways to build better outboards that provide the user with a greater experience on the water.

Over the years, our development and design teams have conceived some very ingenious solutions and technologies that push our outboards to higher levels of performance. This has brought our four-stroke outboards a total of seven prestigious NMMA (National Marine Manufacturers Association) Innovation Awards giving Suzuki Outboards world-wide recognition as the most awarded engine manufacturer in the industry.

Looking forward, we will continue to pursue each and every challenge so that future users can experience the joys of owning a Suzuki Outboard.

2003
DF200/225/250
DF200/225/250 (3614cm³), the first Suzuki 4-stroke V6 outboards revealed.

2011
DF300AP
New Generation DF300AP debuts.

2014
DF25A/30A
DF200A/200AP
DF25A/30A debuts.
DF200A/200AP debuts.

50th 1965-2015 Anniversary SUZUKI

THE ULTIMATE 4-STROKE OUTBOARD

Find out more by watching our videos

Dear Customer,

Quality. Dependability. Innovation. Everything that you expect from your outboard motors is delivered with style by SUZUKI.

Demand no less from the products that you choose to enhance your total boating pleasure. Demand SUZUKI GENUINE ACCESSORIES.

This catalogue represents our commitment to provide you with the finest products available.

From our classic line of matching instruments and gauges to our custom-engineered propellers and rigging items, you can depend on SUZUKI GENUINE ACCESSORIES for optimum performance.

Take a few minutes to browse through this catalogue, and then be sure to visit your AUTHORIZED SUZUKI DEALER for complete ordering information.

Thank you.

SUZUKI MOTOR CORPORATION

MODEL NAME AND ENGINE NUMBER

NOTE : Items and their part numbers showing in this catalogue are basically applicable to models of following engine numbers. Please consult your local dealers regarding other models and their rigging-parts and accessories.

model	engine number
DF300AP	30002P-610001~
DF250AP	25003P-610001~
DF250T	25003F-610001~
DF250Z	25003Z-610001~
DF225T	22503F-610001~
DF225Z	22503Z-610001~
DF200T	20002F-610001~
DF200Z	20002Z-610001~

model	engine number
DF200AP	20003P-610001~
DF200AT	20003F-610001~
DF200AZ	20003Z-610001~
DF175T/TG	17502F-610001~
DF175Z/ZG	17502Z-610001~
DF150T/TG	15002F-610001~
DF150Z/ZG	15002Z-610001~
DF140AT	14003F-610001~

model	engine number
DF140AZ	14003Z-610001~
DF115AT	11503F-610001~
DF115AZ	11503Z-610001~
DF100AT	10003F-610001~
DF90A	09003F-610001~
DF80A	08002F-610001~
DF70A	07003F-610001~
DF60AV	06003F-610001~

model	engine number
DF60A	06002F-610001~
DF50AV	05004F-610001~
DF50A	05003F-610001~
DF40A	04003F-610001~
DF30A	03003F-610001~
DF25A	02504F-610001~
DF20A	02002F-610001~
DF15A	01504F-610001~

model	engine number
DF9.9B	00995F-610001~
DF9.9A	00994F-610001~
DF8A	00801F-610001~
DF6	00602F-510001~
DF5	00502F-510001~
DF4	00402F-510001~
DF2.5	00252F-610001~

model	engine number
DT40W	04005-610001~
DT40WK	04005K-610001~
DT30	03005-610001~
DT25K	02503K-610001~
DT15A	01504-610001~
DT15AK	01503K-610001~
DT9.9A	00996-610001~
DT9.9AK	00993K-610001~

TABLE OF CONTENTS

DISCOVER THE ULTIMATE MARINE EXPERIENCE WITH SUZUKI OUTBOARDS 02
SUZUKI MULTI-FUNCTION GAUGE 06
COMPONENT OF SUZUKI MULTI-FUNCTION GAUGE 10
SUZUKI KEYLESS START SYSTEM 12
ANALOG INSTRUMENT 14
ELECTRONIC THROTTLE AND SHIFT SYSTEM 16
COMPONENT OF SUZUKI PRECISION CONTROL 18
MECHANICAL REMOTE CONTROL SYSTEM 20
COMPONENT OF MECHANICAL REMOTE CONTROL SYSTEM 22
STEERING 24
ELECTRICAL PARTS 26
ANODE / FUEL SYSTEM 27
PROPELLER 30
APPLICATION CHART 34
APPAREL 36
CARE & MAINTENANCE ITEM 40
SUZUKI MAINTENANCE KITS 42

REFERENCE

Part Number	15-digit alpha-numerical number shows Part Number to be used for ordering.
Gauge Size	Shows the size (2" or 4") of the gauge.
Background	Shows a main color of display panel on the front of a gauge.
Applicable Model	Shows typical or recommended models of ENGINES that RIGGING-PARTS and ACCESSORIES can be installed to.
Maximum Speed	Shows maximum speed that SPEEDOMETER displays.
kph	Kilometers Per Hour
mph	Miles Per Hour
knots	Knots

SUZUKI MULTI-FUNCTION GAUGE

Actual Size 34011-96L10-000 GAUGE ASSY, MULTI 001

MAIN FEATURES

HIGH PERFORMANCE

- Multi-Function Gauge displays a wide variety of information such as engine rpm, speed, trim angle, as well as diagnostics based on digital data received from the outboard motor.
- Gauges offer great reliability utilizing Suzuki's original warning system to provide the operator with accurate warning information.
- NMEA2000® terminal offers compatibility with a wide range of marine equipment by other manufacturers. *1

SUPERIOR VISIBILITY

- Suzuki's next generation standard equipment gauge offers easy to use multi-function operation with superior readability.
- Easy to see, easy to read, easy to understand display offers a variety of modes including day and night modes and digital or analog readouts.

COMPACT

- Compact, highly versatile gauge requires an 85mm hole for mounting, making them the perfect replacement for 4-inch analog gauges. *2

*1 NMEA2000® is an NMEA (National Marine Electronics Association) standard communication protocol used for exchanging data between marine control units.
*2 4-inch gauges that require 85mm mounting holes (as researched by Suzuki).

DISPLAY VARIATIONS

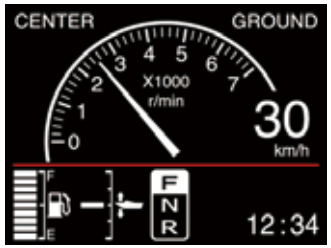

Analog Tacho & Speed Mode

Analog Speed Mode (Night)

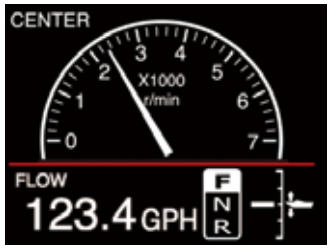

Analog Tacho Mode

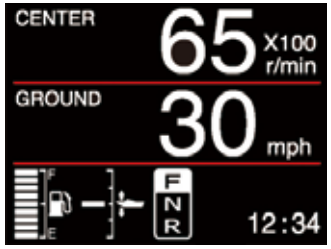

Digital Tacho & Speed Mode

Digital Tacho Mode (Night)

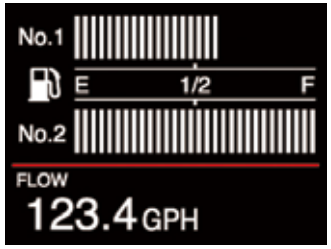

Fuel Mode

INFORMATION

Analog Tacho & Speed Mode

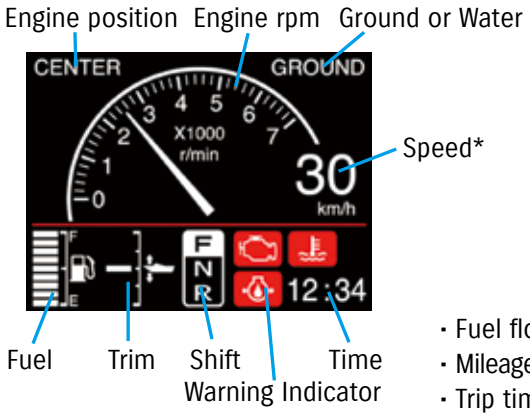

* Speed sensor or GPS module will be required in order to display the speed.

Tacho Mode

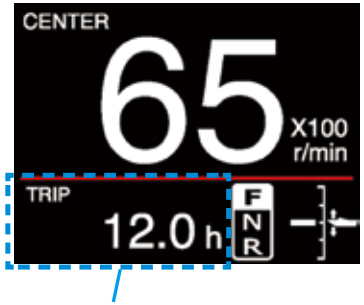

- Fuel flow [l/h, gph] (instantaneous)
- Mileage [km/l, mpg] (instantaneous and average)
- Trip time [h], Trip distance [km, M, NM]
- Engine hour, Voltage, Water temp and more...

SPECIFICATIONS

- 3.5” Color display
- Size: 105mm(W)×105mm(H)×16mm(D)
- Diagnostic display
- Easy installation and setup
  Φ85mm hole & large resin nut
- Includes protective cover
- NMEA2000 output
- Applicable models: DF9.9B-DF300AP

Protective cover
(34211-96L00-000)

· Design and specifications may change without notice due to improvements in performance and function.

SUZUKI MULTI-FUNCTION GAUGE

Necessary when using Water speed sensor and GPS module.

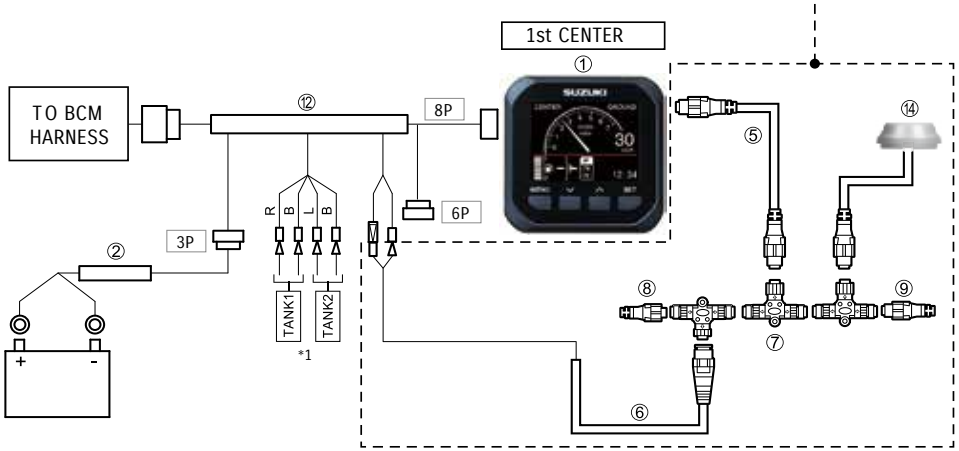

*1 When use additional fuel sender. Connect one by one and set up the fuel senders.

	SUZUKI MULTI-FUNCTION GAUGE for **MECHANICAL SINGLE**			KIT		Total Required Quantity
				A. GAUGE KIT	B. CABLE KIT	
	PART NUMBER	PART NAME	LENGTH	34000-96L40-000	36001-88L00-000	A (+ B) <+ ⑱ >
①	34011-96L10-000 001	GAUGE ASSY, MULTI	–	1	–	1
②	36663-98J00-000 003	WIRE COMP, GAUGE POWER	2.5m	–	–	1
	36663-98J10-000		6.0m	1	–	
⑤	36662-88L10-000	WIRE COMP, EXTENSION	0.6m	–	1	(1)
	36662-88L20-000 006		1.8m	–	–	
⑥	36663-88L00-000 007	HARNESS ASSY, NETWORK POWER	–	–	1	(1)
⑦	36664-88L00-000 008	CONNECTOR COMP, BRANCH	–	–	1	(1)
⑧	36665-88L00-000 009	UNIT COMP, RESISTOR FEMALE	–	–	1	(1)
⑨	36665-88L10-000 010	UNIT COMP, RESISTOR MALE	–	–	1	(1)
⑫	36661-96L10-000 002	ADAPTER COMP, GAUGE	–	1	–	1
⑭	34190-88L00-000 011	SENSOR ASSY, PADDLE WHEEL	–	–	–	(1)
	39950-88L00-000 012	GPS RECEIVER MODULE	–	–	–	
⑱	36660-89L00-000	SMFG, ADAPTER	–	–	–	<1>

*( ) parts are required when using GPS module or water speed.
*< > part is required when using with DF9.9B to 30A.

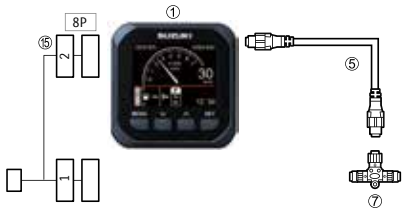

	ADDITIONAL GAUGE COMPONENTS			Total Required
	PART NUMBER	PART NAME	LENGTH	
①	34011-96L10-000 001	GAUGE ASSY, MULTI	–	1
⑤	36662-88L10-000 006	WIRE COMP, EXTENSION	0.6m	1
	36662-88L20-000		1.8m	
⑦	36664-88L00-000 008	CONNECTOR COMP, BRANCH	–	1
⑮	36667-96L10-000	WIRE COMP, DUAL GAUGE ADAPTER	–	1

Necessary when using Water speed sensor and GPS module.

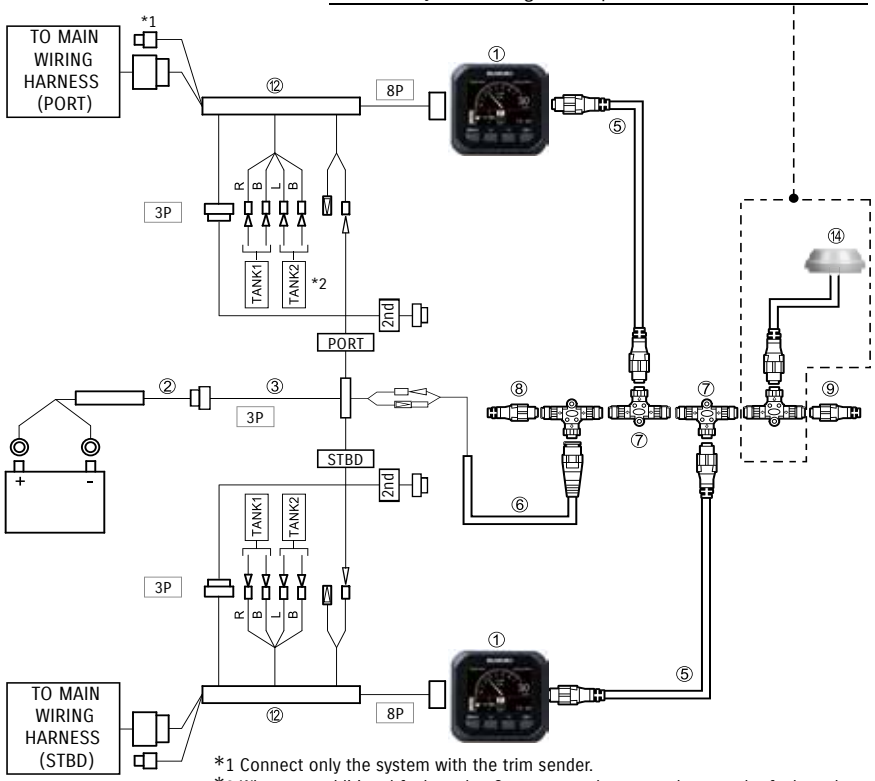

*1 Connect only the system with the trim sender.
*2 When use additional fuel sender. Connect one by one and set up the fuel senders.

	SUZUKI MULTI-FUNCTION GAUGE for **MECHANICAL DUAL**			KIT	Total Required Quantity
				A. GAUGE KIT	
	PART NUMBER	PART NAME	LENGTH	34000-96L50-000	A (+ ⑭)
①	34011-96L10-000 001	GAUGE ASSY, MULTI	–	2	2
②	36663-98J00-000 003	WIRE COMP, GAUGE POWER	2.5m	–	1
	36663-98J10-000		6.0m	1	
③	36665-87L00-000 004	ADAPTER, GAUGE FOR MULTI	–	1	1
⑤	36662-88L10-000	WIRE COMP, EXTENSION	0.6m	2	2
	36662-88L20-000 006		1.8m	–	
⑥	36663-88L00-000 007	HARNESS ASSY, NETWORK POWER	–	1	1
⑦	36664-88L00-000 008	CONNECTOR COMP, BRANCH	–	2	2
⑧	36665-88L00-000 009	UNIT COMP, RESISTOR FEMALE	–	1	1
⑨	36665-88L10-000 010	UNIT COMP, RESISTOR MALE	–	1	1
⑫	36661-96L10-000 002	ADAPTER COMP, GAUGE	–	2	2
⑭	34190-88L00-000 011	SENSOR ASSY, PADDLE WHEEL	–	–	(1)
	39950-88L00-000 012	GPS RECEIVER MODULE	–	–	

*( ) parts are required when using GPS module or water speed.

SUZUKI MULTI-FUNCTION GAUGE for SUZUKI PRECISION CONTROL (S.P.C) SINGLE ENGINE

	PART NUMBER	PART NAME	LENGTH	KIT: A. GAUGE KIT 34000-96L60-000	KIT: B. CABLE KIT 36001-88L00-000	KIT: C. DUAL STATION KIT 34002-96L10-000	Total Required Quantity: SINGLE STATION A (+B+⑭)	Total Required Quantity: DUAL STATION A+B+C+⑩(+⑭)
①	34011-96L10-000 001	GAUGE ASSY, MULTI	–	1	–	1	1	2
②	36663-98J00-000 003	WIRE COMP, GAUGE POWER	2.5m	–	–	–	1	1
	36663-98J10-000		6.0m	1	–	–		
④	36682-92E00-000 005	WIRE COMP, GAUGE EXT	6.4m	–	–	1	–	1
⑤	36662-88L10-000	WIRE COMP, EXTENSION	0.6m	–	1	1	(1)	2
	36662-88L20-000 006		1.8m	–	–	–		
⑥	36663-88L00-000 007	HARNESS ASSY, NETWORK POWER	–	–	1	–	(1)	1
⑦	36664-88L00-000 008	CONNECTOR COMP, BRANCH	–	–	1	1	(1)	2
⑧	36665-88L00-000 009	UNIT COMP, RESISTOR FEMALE	–	–	1	–	(1)	1
⑨	36665-88L10-000 010	UNIT COMP, RESISTOR MALE	–	–	1	–	(1)	1
⑩	36662-88L30-000	WIRE COMP, EXTENSION	4.6m	–	–	–	–	1
	36662-88L00-000		7.6m	–	–	–		
⑪	36666-96L00-000	ADAPTER, GAUGE POWER	–	–	–	1	–	1
⑫	36661-96L00-000 002	ADAPTER COMP, GAUGE	–	1	–	–	1	1
⑭	34190-88L00-000 011	SENSOR ASSY, PADDLE WHEEL	–	–	–	–	(1)	(1)
	39950-88L00-000 012	GPS RECEIVER MODULE	–	–	–	–		
⑯	36665-96L00-000	ADAPTER COMP, DUAL STATION	–	–	–	1	–	1

*( ) parts are required when using GPS module or water speed.

SUZUKI MULTI-FUNCTION GAUGE for SUZUKI PRECISION CONTROL (S.P.C) TRIPLE

	PART NUMBER	PART NAME	LENGTH	KIT: A. GAUGE KIT 34000-96L70-000	KIT: B. DUAL STATION KIT 34002-96L10-000	Total Required Quantity: SINGLE STATION A+①+⑤+⑦(+⑭)	Total Required Quantity: DUAL STATION –
①	34011-96L10-000 001	GAUGE ASSY, MULTI	–	2	1	3	6
②	36663-98J00-000 003	WIRE COMP, GAUGE POWER	2.5m	–	–	1	1
	36663-98J10-000		6.0m	1	–		
④	36682-92E00-000 005	WIRE COMP, GAUGE EXT	6.4m	–	1	–	1
⑤	36662-88L10-000	WIRE COMP, EXTENSION	0.6m	2	1	3	6
	36662-88L20-000 006		1.8m	–	–		
⑥	36663-88L00-000 007	HARNESS ASSY, NETWORK POWER	–	1	–	1	1
⑦	36664-88L00-000 008	CONNECTOR COMP, BRANCH	–	2	1	3	6
⑧	36665-88L00-000 009	UNIT COMP, RESISTOR FEMALE	–	1	–	1	1
⑨	36665-88L10-000 010	UNIT COMP, RESISTOR MALE	–	1	–	1	1
⑩	36662-88L30-000	WIRE COMP, EXTENSION	4.6m	–	–	–	1
	36662-88L00-000		7.6m	–	–		
⑪	36666-96L00-000	ADAPTER, GAUGE POWER	–	–	1	–	1
⑫	36661-96L00-000	ADAPTER COMP, GAUGE	–	1	–	1	1
⑬	36667-96L00-000	WIRE COMP, GAUGE ADAPTER	–	1	–	1	1
⑭	34190-88L00-000 011	SENSOR ASSY, PADDLE WHEEL	–	–	–	(1)	(1)
	39950-88L00-000 012	GPS RECEIVER MODULE	–	–	–		
⑯	36667-96L10-000	WIRE COMP, GAUGE ADAPTER	–	–	–	–	2
⑯	36665-96L00-000	ADAPTER COMP, DUAL STATION	–	–	1	–	1

*( ) parts are required when using GPS module or water speed.

SUZUKI MULTI-FUNCTION GAUGE for SUZUKI PRECISION CONTROL (S.P.C) DUAL

	PART NUMBER	PART NAME	LENGTH	KIT: A. GAUGE KIT 34000-96L70-000	KIT: B. DUAL STATION KIT 34002-96L10-000	Total Required Quantity: SINGLE STATION A (+⑭)	Total Required Quantity: DUAL STATION A+B+①+⑤+⑦+⑩(+⑭)
①	34011-96L10-000 001	GAUGE ASSY, MULTI	–	2	1	2	4
②	36663-98J00-000 003	WIRE COMP, GAUGE POWER	2.5m	–	–	1	1
	36663-98J10-000		6.0m	1	–		
④	36682-92E00-000 005	WIRE COMP, GAUGE EXT	6.4m	–	1	–	1
⑤	36662-88L10-000	WIRE COMP, EXTENSION	0.6m	2	1	2	4
	36662-88L20-000 006		1.8m	–	–		
⑥	36663-88L00-000 007	HARNESS ASSY, NETWORK POWER	–	1	–	1	1
⑦	36664-88L00-000 008	CONNECTOR COMP, BRANCH	–	2	1	2	4
⑧	36665-88L00-000 009	UNIT COMP, RESISTOR FEMALE	–	1	–	1	1
⑨	36665-88L10-000 010	UNIT COMP, RESISTOR MALE	–	1	–	1	1
⑩	36662-88L30-000	WIRE COMP, EXTENSION	4.6m	–	–	–	1
	36662-88L00-000		7.6m	–	–		
⑪	36666-96L00-000	ADAPTER, GAUGE POWER	–	–	1	–	1
⑫	36661-96L00-000 002	ADAPTER COMP, GAUGE	–	1	–	1	1
⑬	36667-96L00-000	WIRE COMP, GAUGE ADAPTER	–	1	–	1	1
⑭	34190-88L00-000 011	SENSOR ASSY, PADDLE WHEEL	–	–	–	(1)	(1)
	39950-88L00-000 012	GPS RECEIVER MODULE	–	–	–		
⑯	36667-96L10-000	WIRE COMP, GAUGE ADAPTER	–	–	–	–	1
⑯	36665-96L00-000	ADAPTER COMP, DUAL STATION	–	–	1	–	1

*( ) parts are required when using GPS module or water speed.

SUZUKI MULTI-FUNCTION GAUGE for SUZUKI PRECISION CONTROL (S.P.C) QUADRAPLE

	PART NUMBER	PART NAME	LENGTH	KIT: GAUGE KIT 34000-96L70-000	KIT: DUAL STATION KIT 34002-96L10-000	Total Required Quantity: SINGLE STATION –	Total Required Quantity: DUAL STATION –
①	34011-96L10-000 001	GAUGE ASSY, MULTI	–	2	1	4	8
②	36663-98J00-000 003	WIRE COMP, GAUGE POWER	2.5m	–	–	1	1
	36663-98J10-000		6.0m	1	–		
③	36665-87L00-000 004	ADAPTER, GAUGE FOR MULTI	–	–	–	1	1
④	36682-92E00-000 005	WIRE COMP, GAUGE EXT	6.4m	–	1	–	2
⑤	36662-88L10-000	WIRE COMP, EXTENSION	0.6m	2	1	4	8
	36662-88L20-000 006		1.8m	–	–		
⑥	36663-88L00-000 007	HARNESS ASSY, NETWORK POWER	–	1	–	1	1
⑦	36664-88L00-000 008	CONNECTOR COMP, BRANCH	–	2	1	4	8
⑧	36665-88L00-000 009	UNIT COMP, RESISTOR FEMALE	–	1	–	1	1
⑨	36665-88L10-000 010	UNIT COMP, RESISTOR MALE	–	1	–	1	1
⑩	36662-88L30-000	WIRE COMP, EXTENSION	4.6m	–	–	–	1
	36662-88L00-000		7.6m	–	–		
⑪	36666-96L00-000	ADAPTER, GAUGE POWER	–	–	1	–	2
⑫	36661-96L00-000	ADAPTER COMP, GAUGE	–	1	–	2	2
⑬	36667-96L00-000	WIRE COMP, GAUGE ADAPTER	–	1	–	2	2
⑭	34190-88L00-000 011	SENSOR ASSY, PADDLE WHEEL	–	–	–	(1)	(1)
	39950-88L00-000 012	GPS RECEIVER MODULE	–	–	–		
⑯	36667-96L10-000	ADAPTER COMP, DUAL STATION	–	–	1	–	2

*( ) parts are required when using GPS module or water speed.

COMPONENT OF SUZUKI MULTI-FUNCTION GAUGE

POWER CABLE

ADAPTER, GAUGE

36661-96L10-000 002

36661-96L00-000

HARNESS, ACTIVE HUB PWR

36663-98J00-000 003

2.5M

Applicable Model DF9.9B/15A/20A/40A-300AP

36663-98J10-000

6.0M

Applicable Model DF9.9B/15A/20A/40A-300AP

WIRE, DUAL GAUGE ADAPTER

36667-96L10-000

WIRE, GAUGE ADAPTER

36667-96L00-000

ADAPTER, GAUGE

36665-87L00-000 004

For using multiple SMFGs

Applicable Model 40A-300AP

36665-96L00-000

ADAPTER, DUAL STATION

WIRE, TRIM METER

36682-92E00-000 005

36666-96L00-000

ADAPTER, GAUGE POWER

CONNECTION HARDWARE

The extension cable is the main line of MFG. Data communication runs the length of the boat, capped at each and with a 120-ohm terminator. NMEA2000® compatible sensors or other devices can be added by the use of T-connectors throughout the system.

EXTENSION CABLE

36662-88L10-000
2 feet

36662-88L20-000 006
6 feet

36662-88L30-000
15 feet

36662-88L00-000
25 feet

POWER CABLE WITH A T-CONNECTOR

36663-88L00-000 007
The fused (3A) lead connects the extension cable to the power source.

T-CONNECTOR

36664-88L00-000 008
T-connectors link all compatible cables, data and sensor devices, and can be easily secured.

TERMINATOR FEMALE

36665-88L00-000 009
120-ohm terminators are required for any open cable ends in the system.

TERMINATOR MALE

36665-88L10-000 010
120-ohm terminators are required for any open cable ends in the system.

SENSORS

SPEED SENSOR WITH A T-CONNECTOR

34190-88L00-000 011
Paddle wheel-type speed sensor. 10ft cable.

GPS RECEIVER MODULE WITH A T-CONNECTOR

39950-88L00-000 012
Displays the accurate location and speed on Multi-Function Gauges.

SUZUKI KEYLESS START SYSTEM

EASY OPERATION

- Suzuki original engine starting system offers a variety of functions. The key-fob is easy to carry and one is all you need to enjoy stress-free starts for greater boating pleasure.

- One step ahead of the competition, the Suzuki Keyless Start System requires no mechanical key so the key-fob remains safely in your pocket.

WATERPROOF FLOAT KEY-FOB

- The easy to carry key-fob remains safely in your pocket reducing risk of a lost key. The key-fob is waterproof and floats so should it ever go overboard it is retrievable.

HIGH SECURITY

- Suzuki original engine starting system features an immobilizer function for added peace of mind. IC access codes installed in the key-fob and engine must match for the engine to start.
  This prevents starting the engine with the wrong key making the system a good theft deterrent as well.

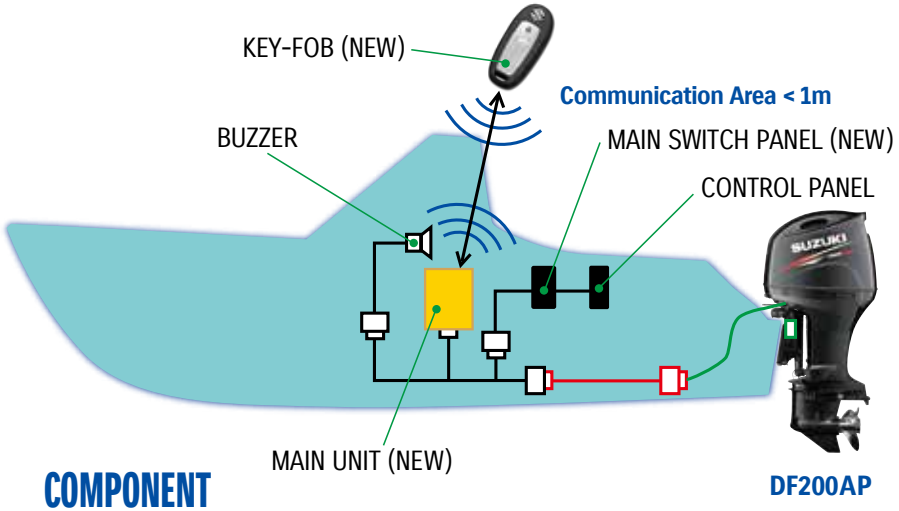

Find out more by watching our videos

COMPONENT

*Availability may differ in some regions. Please contact your local Suzuki dealer for more information.

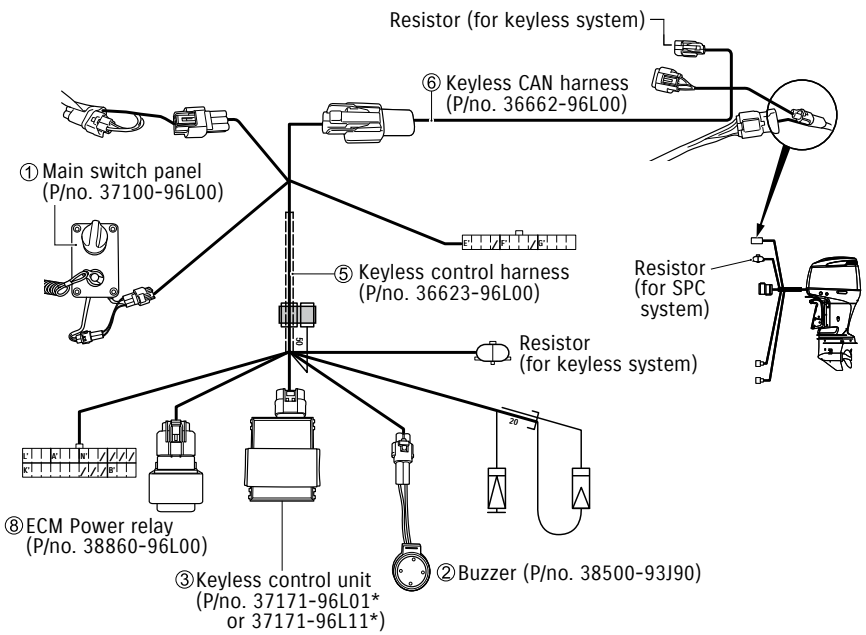

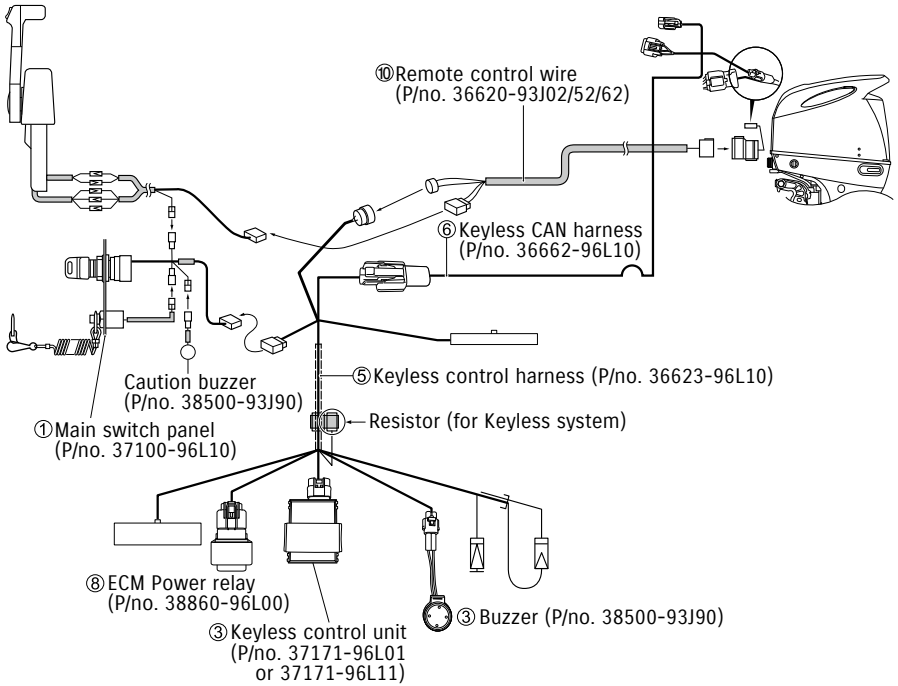

SUZUKI KEYLESS START SYSTEM for

SUZUKI PRECISION CONTROL (S.P.C)

	PART NUMBER	PART NAME	LENGTH	KIT: CONTROLLER SET 37170-96L01 / 37170-96L11	KIT: HARNESS SET 37105-96L01	Total Required Quantity: SINGLE	DUAL	TRIPLE	QUAD
①	37100-96L00-000	MAIN SWITCH PANEL	–	–	–	1	1	1	1
②	38500-93J90-000	BUZZER	–		1	1	1	1	1
③	37171-96L01-000 37171-96L11-000	KEYLESS CONTROL UNIT	–	1	–	1	1	1	1
④	37172-96L00-000 37172-96L10-000	KEYLESS FOB	–	2	–	2	2	2	2
⑤	36623-96L01-000	KEYLESS CONTROL HARNESS	–	–	1	1	1	1	1
⑥	36662-96L00-000	KEYLESS CAN HARNESS	6.5	–	1	1	1	1	1
⑦	36664-96L00-000	CAN EXTENSION HARNESS	0.8	–		–	1	2	3
⑧	38860-96L00-000	RELAY ASSY, KLS	–	–	1	1	1	1	1
⑨	37173-96L10-000	HOLDER, KLS PARTS	–	–	1	1	1	1	1
⑩	32980-38F00-000	HOLDER, CDI UNIT	–	–	1	1	1	1	1
⑪	32851-93J00-000	CUSHION	–	–	1	1	1	1	1
–	09407-14407-000	CLAMP, KLS HARNESS	–	–	1	1	1	1	1
–	37117-96L00-000	DECAL, KLS	–	2	–	–	–	–	–

37170-96L01 (433.92MHz) or 37170-96L11 (315MHz)

SUZUKI KEYLESS START SYSTEM for

MECANICAL REMOTE CONTROL SYSTEM

	PART NUMBER	PART NAME	LENGTH	KIT: CONTROLLER SET 37170-96L01 / 37170-96L11	KIT: HARNESS SET 37105-96L10	Total Required Quantity: SINGLE	DUAL
①	37100-96L10-000	MAIN SWITCH PANEL	–	–	–	1	–
	37100-96L20-000		–	–	–	–	1
②	38500-93J90-000	BUZZER	–	–	1	1	1
③	37171-96L01-000 37171-96L11-000	KEYLESS CONTROL UNIT	–	1	–	1	1
④	37172-96L00-000 37172-96L10-000	KEYLESS FOB	–	2	–	2	2
⑤	36623-96L10-000	KEYLESS CONTROL HARNESS	–	–	1	1	1
⑥	36662-96L10-000	KEYLESS CAN HARNESS	6.5	–	1	1	1
⑦	36664-96L00-000	CAN EXTENSION HARNESS	0.8	–		–	1
⑧	38860-96L00-000	RELAY ASSY, KLS	–	–	1	1	1
⑨	37173-96L10-000	HOLDER, KLS PARTS	–	–	1	1	1
⑫	36621-96L00-000	HARNESS ASSY, DUAL KLS ENG	–	–	–	–	1
⑬	36663-96L10-000	WIRE COMP, KLS CAN EXT	2.0	–		–	1
⑩	32980-38F00-000	HOLDER, CDI UNIT	–	–	1	1	1
⑪	32851-93J00-000	CUSHION	–	–	1	1	1
–	37117-96L00-000	DECAL, KLS	–	2	–	–	–

37170-96L01 (433.92MHz) or 37170-96L11 (315MHz)

ANALOG INSTRUMENT

Caution lamp	Caution type
CHECK ENGINE	Low battery-voltage or Other cautions on S.D.S
TEMP	Overheat (Over-revolution)

Caution lamp	Caution type
OIL	Low oil-pressure (Over-revolution)
	Oil change reminder
REV LIMIT	Over-revolution

TACHOMETER

White Black

(White) **34200-93J12-000** 013 (Black) **34200-93J00-000** 014

Gauge Size	4”
Applicable Model	DF25A-250

Caution systems alert with a monitor lamp lighting on when an abnormal engine condition occurs. Refer to SERVICE MANUAL for the detail.

White Black

(White) **34200-93J51-000** 015 (Black) **34200-93J40-000** 016

Gauge Size	4”
Applicable Model	DF40A-140A/150TG/175TG/200A

Exclusive for SUZUKI Troll Mode System. Automatically switches to low RPM scale when the SUZUKI Troll Mode System is activated.

White Black

(White) **34200-93J32-000** 017 (Black) **34200-93J20-000** 018

Gauge Size	4”
Applicable Model	DF8A-30A, DT30/40W

Full-scale 7000-RPM TACHOMETER can be used on electric-start models by using 4, 6 or 12 pole switch on rear of meter.

TRIM GAUGE

White Black

34800-93J11-000 (White) 019
34800-93J00-000 (Black) 020

Gauge Size	2”
Applicable Model	DF25A-250

Magnetic-type gauge shows trim angle for optimum performance and efficiency.

FUEL GAUGE

White Black

34300-93J11-000 (White) 021
34300-93J00-000 (Black) 022

Gauge Size	2”
Applicable Model	DF8A-250, DT30/40

FUEL GAUGE alone works with the US Standard 250Ω sending unit. Use the 150Ω adaptor to connect the gauge to a European standard sending unit.

HOUR METER

White Black

34500-93J11-000 (White) 023
34500-93J00-000 (Black) 024

Gauge Size	2”
Applicable Model	DF8A-250, DT30/40

12-volt-electric-motor-driven meter indicates hours that your SUZUKI OUTBOARD MOTOR has been operated in order for you to know when each periodic service is required.

VOLTMETER

White Black

34600-93J11-000 (White) 025
34600-93J00-000 (Black) 026

Gauge Size	2”
Applicable Model	DF8A-250, DT30/40

To help your SUZUKI OUTBOARD MOTOR run at its best, monitor the charging system functioning with a VOLTMETER.

WATER-PRESSURE GAUGE

White Black

34650-93J31-000 (White) 027
34650-93J20-000 (Black) 028

Gauge Size	2”
Applicable Model	DF40A-250

Bourdon-tube type gauge measures cooling-water pressure. Select an approriate INSTALLATION KIT for each model.

SPEEDOMETER

White

Black

(White) **34100-93J11-000** 029

(Black) **34100-93J00-000** 030

Gauge Size	4”
Maximum Speed	130km/h, 80mph

Bourdon-tube type speedometer with readings in km/h and mph. Includes vinyl tube, hardware and installation manual.

White

Black

(White) **34100-93J31-000** 031

(Black) **34100-93J20-000** 032

Gauge Size	4”
Maximum Speed	80km/h, 50mph

Bourdon-tube type speedometer with readings in km/h and mph. Includes vinyl tube, hardware and installation manual.

White

Black

(White) **34100-93J51-000** 033

(Black) **34100-93J40-000** 034

Gauge Size	4”
Maximum Speed	80km/h, 45knots

Bourdon-tube type speedometer with readings in km/h and mph. Includes vinyl tube, hardware and installation manual.

34100-93J60-000 035

Gauge Size	4”
Background	White
Maximum Speed	120km/h, 65knots

Bourdon-tube type speedometer with readings in km/h and knots. Includes vinyl tube, hardware and installation manual.

SPEEDOMETER SENDER ASSY

34190-95500-000 036

34190-87D00-000 037

INSTALLATION KIT for WATER-PRESSURE GAUGE

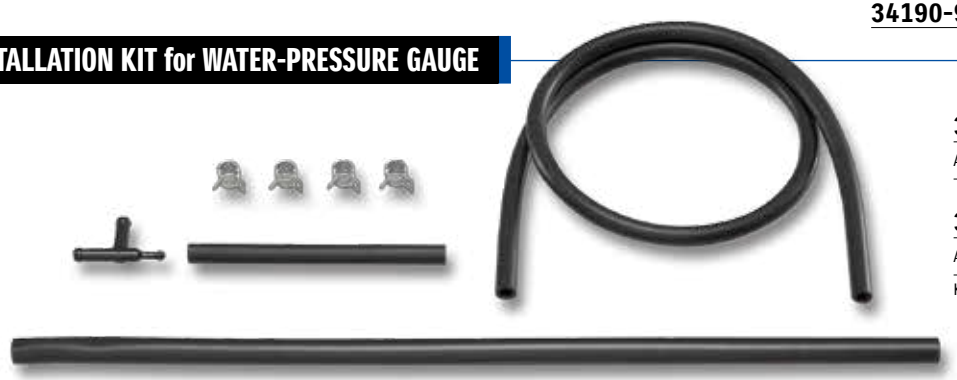

34660-90J02-000

Applicable Model DF40A-140A

34660-93J00-000 038

Applicable Model DF200-250

KIT includes fittings and hoses needed for motor to gauge connection.

34660-96J00-000

Applicable Model DF150-175/200A

ELECTRONIC THROTTLE AND SHIFT SYSTEM

- Computerized Drive by Wire system of the Suzuki Precision Control (S.P.C.) eliminates wiring friction losses and allows smooth and superior handling. As a result, SPC makes smooth and linear control from start and at low speed.
- By the control panel operation (included remote-control kits), you can start and stop the engine and change a steering station with multiple engines you can control the synchronization of an engine rev and change the tilt angles.
- Not only DF300AP/250AP/200AP, but also DF150TG/ZG, DF175TG/ZG are suitable for this system.
- Chrome plating finish for better rust resistance.
- applicable to maximum 2 stations and maximum 4 engines.
- 8 kinds of rigging parts kits are available for your convenience to select all necessary parts for your requirements.

67200-98J03-000
BINNACLE MOUNT R/C BOX
for SINGLE ENGINE
039

67200-98J22-000
FLUSH MOUNT R/C BOX
for SINGLE ENGINE
040

67200-98J13-000
BINNACLE MOUNT R/C BOX
for DUAL ENGINE
041

REMOTE-CONTROL KIT for SINGLE ENGINE

	PART NUMBER		PART NAME	LENGTH	KIT: 1st Station 67000-98JE0-000 BINNACLE-MOUNT CONTROL KIT	KIT: 1st Station 67000-98J69-000 FLUSH-MOUNT CONTROL KIT	KIT: 2nd Station 67000-98JF0-000 2ND-STATION BINNACLE-MOUNT CONTROL KIT	KIT: 2nd Station 67000-98JL0-000 2ND-STATION FLUSH-MOUNT CONTROL KIT	Total Required Quantity: SINGLE STATION	Total Required Quantity: DUAL STATION
①	67200-98J03-000	039	BINNACLE MOUNT R/C BOX		1	–	1	–	1	2
	67200-98J22-000	040	FLUSH MOUNT R/C BOX		–	1	–	1		
②	37100-98J11-000	043	CONTROL PANEL		1	1	1	1	1	2
③	37100-98J04-000	042	MAIN SWITCH PANEL		1	1	–	–	1	1
	37100-96L00-000		MAIN SWITCH PANEL for KEYLESS START SYSTEM		*A	*B		–		
④	37860-87L00-000	074	TROLL MODE SWITCH PANEL		1	1	1	1	1	2
⑤	38500-93J90-000	071	WARNING BUZZER		1	1	1	1	1	2
	09407-08401-000		WARNING-BUZZER CLAMP		1	1	1	1	1	2
⑥	36770-98J11-000	046	BOAT CONTROL MODULE		1	1	1	1	1	2
	36775-98J00-000	047	BCM HOLDER (L)		1	1	1	1	1	2
	36776-98J00-000	048	BCM HOLDER (R)		1	1	1	1	1	2
	33911-88BL0-000	049	BCM-CONNECT CAP		1	1	1	1	1	2
	33925-93J00-000	050	BCM CUSHION		1	1	1	1	1	2
⑦	33926-98J00-000	056	TERMINAL RESISTOR		2	2	–	–	2	2
⑧	36625-98J10-000	055	BATTERY-LEAD		1	1	–	–	1	1
⑨	36623-98J20-000	057	BCM #1 WIRING HARNESS		1	1	–	–	1	1
⑩	36622-98J00-000	054	DUAL-STATION WIRING HARNESS		–	–	1	1	–	1
⑪	36624-98J02-000	058	BCM #2 WIRING HARNESS		–	–	1	1	–	1
⑫	37803-93J04-000	068	EMERGENCY SWITCH PANEL		–	–	1	1	–	1
–	09403-13402-000		HARNESS CLAMP		10	10	10	10	–	–
*⑬	36620-98J30-000	051	MAIN WIRING HARNESS	6.5m	–	–	–	–	1	2
	36620-98J40-000			9.5m	–	–	–	–		
	36620-98J50-000	052	MAIN WIRING HARNESS EXTENSION	2.0m	–	–	–	–	–	–

*⑬ is not included in these kits.
Please purchase these items separately

*A 67000-98J91-000 *B 67000-98JC1-000 is required when using Suzuki Keyless Start System.

REMOTE-CONTROL KIT for DUAL ENGINE

	PART NUMBER		PART NAME	LENGTH	KIT: 1st Station 67000-98JG0-000 BINNACLE-MOUNT CONTROL KIT	KIT: 2nd Station 67000-98JF0-000 2ND-STATION BINNACLE-MOUNT CONTROL KIT	Total Required Quantity: SINGLE STATION	Total Required Quantity: DUAL STATION
①	67200-98J13-000	041	BINNACLE MOUNT R/C BOX		1	1	1	2
②	37100-98J21-000	044	CONTROL PANEL		1	1	1	2
③	37100-98J04-000	042	MAIN SWITCH PANEL		1	–	1	1
	37100-96L00-000		MAIN SWITCH PANEL for KEYLESS START SYSTEM		*C	–		
④	37860-87L00-000	074	TROLL MODE SWITCH PANEL		1	1	1	2
⑤	38500-93J90-000	071	WARNING BUZZER		1	1	1	2
	09407-08401-000		WARNING-BUZZER CLAMP		1	1	1	2
⑥	36770-98J11-000	046	BOAT CONTROL MODULE		1	1	1	2
	36775-98J00-000	047	BCM HOLDER (L)		1	1	1	2
	36776-98J00-000	048	BCM HOLDER (R)		1	1	1	2
	33911-88BL0-000	049	BCM-CONNECT CAP		1	1	1	2
	33925-93J00-000	050	BCM CUSHION		1	1	1	2
⑦	33926-98J00-000	056	TERMINAL RESISTOR		2	–	2	2
⑧	36625-98J10-000	055	BATTERY-LEAD		1	–	1	1
⑨	36623-98J30-000		BCM #1 WIRING HARNESS		1	–	1	1
⑩	36622-98J00-000	054	DUAL-STATION WIRING HARNESS		–	1	–	1
⑪	36624-98J11-000		BCM #2 WIRING HARNESS		–	1	–	1
⑫	37803-93J04-000	068	EMERGENCY SWITCH PANEL		–	1	–	1
–	36621-98J00-000	053	ENGINE WIRING HARNESS		1	–	1	1
–	09403-13402-000		HARNESS CLAMP		15	10	–	–
*⑬	36620-98J30-000	051	MAIN WIRING HARNESS	6.5m	–	–	1	2
	36620-98J40-000			9.5m	–	–		
	36620-98J50-000	052	MAIN WIRING HARNESS EXTENSION	2.0m	–	–	–	–

*⑬ is not included in these kits.
Please purchase these items separately

*C 67000-98JA1-000 QTY1, 36664-96L00-000 QTY1 is required when using Suzuki Keyless Start System.

SINGLE STATION

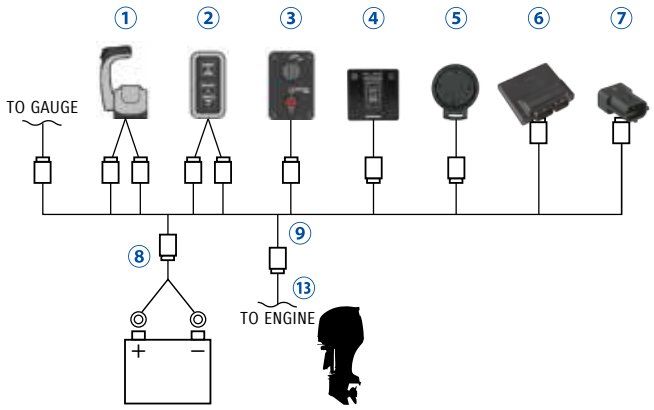

DUAL STATION

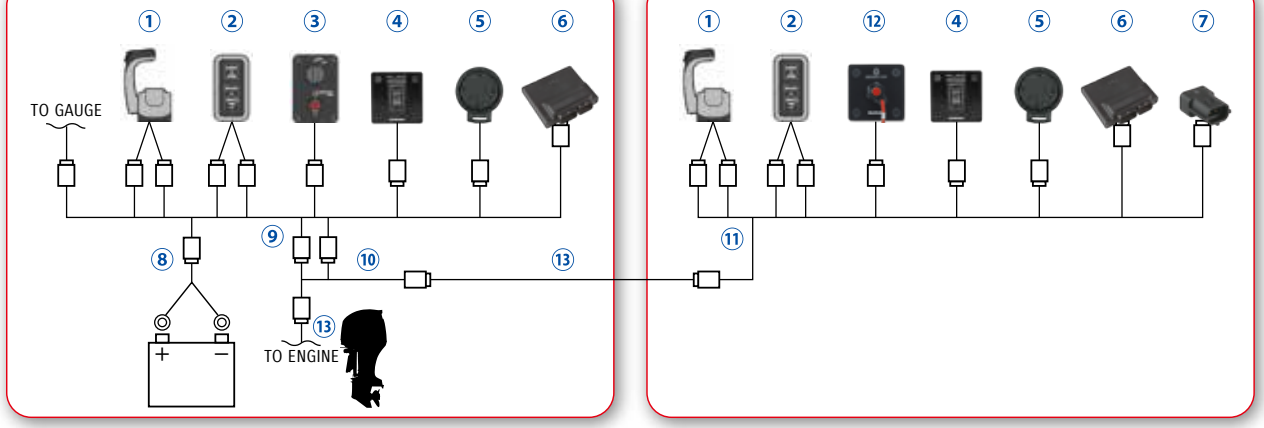

REMOTE-CONTROL KIT for TRIPLE ENGINE

	PART NUMBER	PART NAME	LENGTH	KIT: 1st Station 67000-98JJ0-000 BINNACLE-MOUNT CONTROL KIT	KIT: 2nd Station 67000-98JK0-000 2ND-STATION BINNACLE-MOUNT CONTROL KIT	Total Required Quantity: SINGLE STATION	Total Required Quantity: DUAL STATION
①	67200-98J13-000 041	BINNACLE MOUNT R/C BOX		1	1	1	2
②	37100-98J31-000 045	CONTROL PANEL		1	1	1	2
③	37100-98J04-000 042	MAIN SWITCH PANEL		1	–	1	1
	37100-96L00-000	MAIN SWITCH PANEL for KEYLESS START SYSTEM		*D	–		
④	37860-87L00-000 074	TROLL MODE SWITCH PANEL		1	1	1	2
⑤	38500-93J90-000 071	WARNING BUZZER		1	1	1	2
	09407-08401-000	WARNING-BUZZER CLAMP		1	1	1	2
⑥	36770-98J11-000 046	BOAT CONTROL MODULE		1	1	1	2
	36775-98J00-000 047	BCM HOLDER (L)		1	1	1	2
	36776-98J00-000 048	BCM HOLDER (R)		1	1	1	2
	33911-88BL0-000 049	BCM-CONNECT CAP		1	1	1	2
	33925-93J00-000 050	BCM CUSHION		1	1	1	2
⑦	33926-98J00-000 056	TERMINAL RESISTOR		2	–	2	2
⑧	36625-98J10-000 055	BATTERY-LEAD		1	–	1	1
⑨	36623-98J30-000	BCM #1 WIRING HARNESS		1	–	1	1
⑩	36622-98J00-000 054	DUAL-STATION WIRING HARNESS		–	1	–	1
⑪	36624-98J11-000	BCM #2 WIRING HARNESS		–	1	–	1
⑫	37803-93J04-000 068	EMERGENCY SWITCH PANEL		–	1	–	1
–	36621-98J00-000 053	ENGINE WIRING HARNESS		1	–	1	1
–	09403-13402-000	HARNESS CLAMP		18	10	–	–
*⑬	36620-98J30-000 051	MAIN WIRING HARNESS	6.5m	–	–	1	2
	36620-98J40-000		9.5m	–	–		
	36620-98J50-000 052	MAIN WIRING HARNESS EXTENSION	2.0m	–	–	–	–

*⑬ is not included in these kits.
Please purchase these items separately

*D 67000-98JB1-000 QTY1, 36664-96L00-000 QTY2 is required when using Suzuki Keyless Start System.

REMOTE-CONTROL KIT for QUADRUPLE ENGINE

	PART NUMBER	PART NAME	LENGTH	KIT: 1st Station 67000-98J71-000 BINNACLE-MOUNT CONTROL KIT	KIT: 2nd Station 67000-98J81-000 2ND-STATION BINNACLE-MOUNT CONTROL KIT	Total Required Quantity: SINGLE STATION	Total Required Quantity: DUAL STATION
①	67200-98J13-000 041	BINNACLE MOUNT R/C BOX		1	1	1	2
②	37100-98J21-000 044	CONTROL PANEL		2	2	2	4
③	37100-98J04-000 042	MAIN SWITCH PANEL		1	–	1	1
	37100-96L00-000	MAIN SWITCH PANEL for KEYLESS START SYSTEM		*E	–		
④	37860-87L00-000 074	TROLL MODE SWITCH PANEL		1	1	1	2
⑤	38500-93J90-000 071	WARNING BUZZER		2	2	2	4
	09407-08401-000	WARNING-BUZZER CLAMP		2	2	2	4
⑥	36770-98J20-000	BOAT CONTROL MODULE		2	2	2	4
	36775-98J00-000 047	BCM HOLDER (L)		2	2	2	4
	36776-98J00-000 048	BCM HOLDER (R)		2	2	2	4
	33911-88BL0-000 049	BCM-CONNECT CAP		2	2	2	4
	33925-93J00-000 050	BCM CUSHION		2	2	2	4
⑦	33926-98J00-000 056	TERMINAL RESISTOR		4	–	4	4
⑧	36625-98J10-000 055	BATTERY-LEAD		2	–	2	2
⑨	36623-98J40-000	BCM #1 WIRING HARNESS		1	–	1	1
⑩	36622-98J00-000 054	DUAL-STATION WIRING HARNESS		–	2	–	2
⑪	36624-98J40-000	BCM #2 WIRING HARNESS		–	1	–	1
⑫	37803-93J04-000 068	EMERGENCY SWITCH PANEL		–	1	–	1
–	36621-98J00-000 053	ENGINE WIRING HARNESS		2	–	2	2
–	09403-13402-000	HARNESS CLAMP		20	15	–	–
*⑬	36620-98J30-000 051	MAIN WIRING HARNESS	6.5m	–	–	2	4
	36620-98J40-000		9.5m	–	–		
	36620-98J50-000 052	MAIN WIRING HARNESS EXTENSION	2.0m	–	–	–	–

*⑬ is not included in these kits.
Please purchase these items separately

*E 67000-98JD0-000 QTY1, 36664-96L00-000 QTY3 is required when using Suzuki Keyless Start System.

COMPONENT OF SUZUKI PRECISION CONTROL

Applicable model
DF150TG/ZG/175TG/ZG/200AP/250AP/300AP

MAIN SWITCH PANEL

37100-98J04-000 042
Single ignition with Emergency-stop switch

CONTROL PANEL

37100-98J11-000 043
for Single-Engine

37100-98J21-000 044
for Dual-Engine

37100-98J31-000 045
for Triple-Engine

BOAT CONTROL MODULE (BCM)

36770-98J11-000 046

36770-98J20-000
for Quadruple-Engines

BCM HOLDER (L/R)

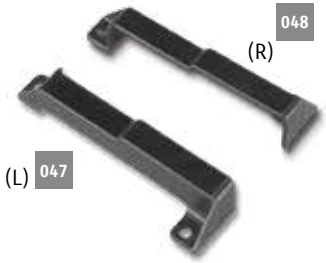

36775-98J00-000 047

36776-98J00-000 048

BCM-CONNECT CAP

33911-88BL0-000 049

BCM CUSHION

33925-93J00-000 050

MAIN WIRING HARNESS

36620-98J30-000 051
6.5 meters for control system

36620-98J40-000
9.5 meters for control system

MAIN-WIRING-HARNESS EXTENSION

36620-98J50-000 052
2.0 meters for control system

ENGINE WIRING HARNESS

36621-98J00-000 053
for Dual-Engine

36621-98J10-000
for Triple-Engine

DUAL-STATION WIRING HARNESS

36622-98J00-000 054
for Dual-station control system

BATTERY LEAD

36625-98J10-000 055
6.5 meters

TERMINAL RESISTOR

33926-98J00-000 056

BCM #1 WIRING HARNESS

36623-98J20-000 057
for Single-Engine and Single (First) station

36623-98J30-000
for Dual or Triple-Engine and Single (First) station

36623-98J40-000
for Quadruple-Engine

BCM #2 WIRING HARNESS

36624-98J02-000 058
for Single-Engine and Second station

36624-98J11-000
for Dual or Triple-Engine and Second station

36623-98J40-000
for Quadruple-Engine and Second station

MECHANICAL REMOTE CONTROL SYSTEM

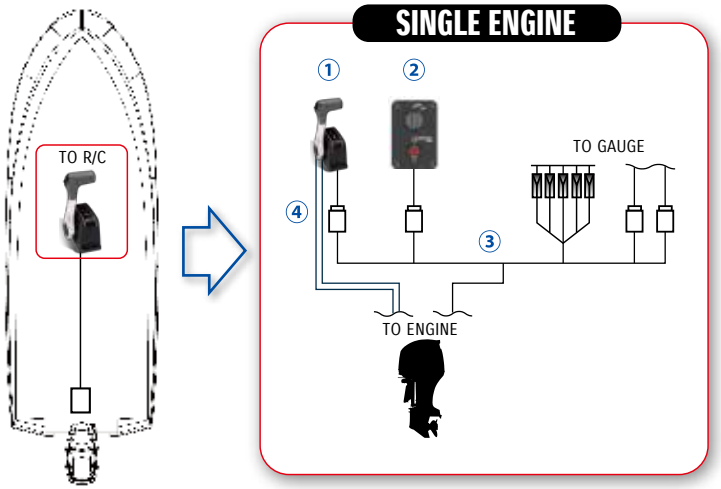

REMOTE-CONTROL KIT for SINGLE ENGINE

	PART NUMBER		PART NAME	LENGTH	KIT 67000-93J05-000 BINNACLE-MOUNT CONTROL KIT	67000-93J49-000 BINNACLE-MOUNT CONTROL KIT	67000-93J26-000 FLUSH-MOUNT CONTROL KIT	67000-93J90-000 FLUSH-MOUNT CONTROL KIT	67000-93J80-000 SIDE-MOUNT CONTROL KIT	Required SINGLE STATION
①	67200-93J13-000	059	BINNACLE MOUNT R/C BOX		1	1	–	–	–	1
	67200-93J32-000	060	FLUSH MOUNT R/C BOX		–	–	1	1	–	
	67200-93J50-000		SIDE MOUNT R/C BOX		–	–	–	–	1	
	67200-96L00-000		SIDE MOUNT R/C BOX FOR KEYLESS START SYSTEM		–	–	–	–	(*5)	
②	37100-96J24-000	069	SINGLE IGNITION WITH E/S SWITCH		1	1	1	1	*A	1
	37100-96L10-000		SINGLE IGNITION WITH E/S SWITCH FOR KEYLESS START SYSTEM		(*1)	(*2)	(*3)	(*4)	(*A)	
③	36620-93J02-000	065	MAIN WIRING HARNESS	5.0m	–	1	–	1	1	1
	36620-93J52-000			6.5m	–	–	–	–	–	
	36620-93J62-000			8.0m	–	–	–	–	–	
	36620-94J01-000			6.5m	–	–	–	–	–	
	34200-93J12-000	013	TACHOMETER (FACE : WHITE)		–	1	–	1	1	
	34800-93J11-000	019	TRIM GAUGE (FACE : WHITE)		–	1	–	1	1	
④	67320-93J00-000	076	R/C CABLE (ORT THROTTLE AND SHIFT CABLES)	8ft. / 2.44m						2
	67320-93J10-000			10ft. / 3.05m						
	67320-93J20-000			12ft. / 3.66m						
	67320-93J30-000			14ft. / 4.27m						
	67320-93J40-000			16ft. / 4.88m						
	67320-93J50-000			18ft. / 5.49m						
	67320-93J60-000			20ft. / 6.10m						
	67320-93J70-000			22ft. / 6.71m						
	67320-93J80-000			24ft. / 7.32m						
	36620-93J10-000		MAIN WIRING HARNESS EXTENSION	2m						
	36620-93J40-000			3m						
	37860-87L00-000	074	TROLL MODE SWITCH PANEL		*B					

*1 ~ 5 part is required when using Suzuki Keyless Start System.
Kit number for Suzuki Keyless Start System *1 67000-93JD0-000 *2 67000-93JG0-000 *3 67000-93JF0-000 *4 67000-93JK0-000 *5 67000-93JJ0-000

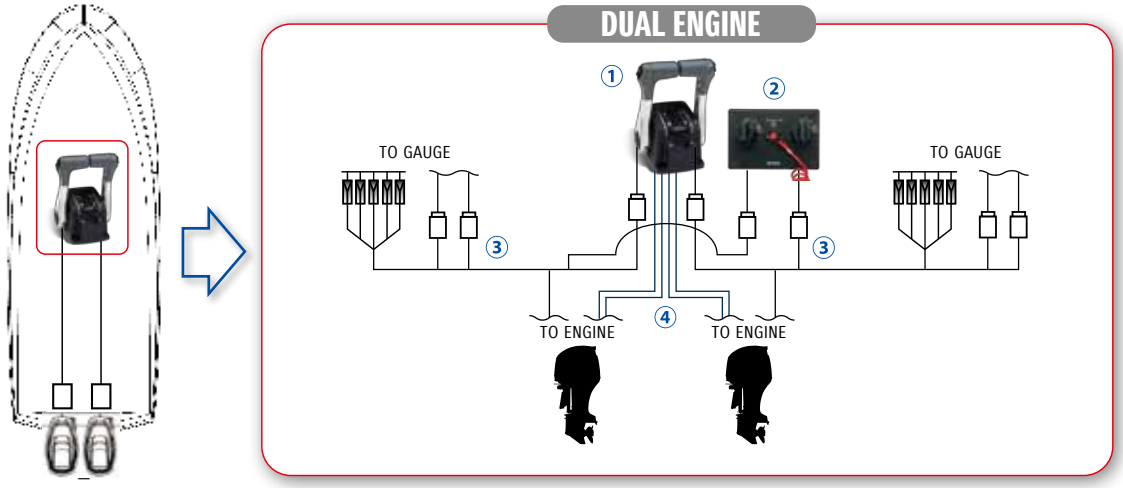

※A The side mouont control box is equipped with an ignition switch, an emergency switch and warning buzzer with clamp.
※B For more accurate speed control, please purchase the TACHOMETER (34200-93J50(40)) sepalately.

REMOTE-CONTROL KIT for DUAL ENGINE

	PART NUMBER		PART NAME	LENGTH	KIT 67000-93J15-000 BINNACLE-MOUNT CONTROL KIT	67000-93J59-000 BINNACLE-MOUNT CONTROL KIT	Required SINGLE STATION
①	67200-93J23-000	060	BINNACLE MOUNT R/C BOX		1	1	1
②	37100-96J14-000	070	DUAL IGNITION WITH E/S SWITCH		1	1	1
	37100-96L20-000		DUAL IGNITION WITH E/S SWITCH FOR KEYLESS START SYSTEM		–	–	
③	36620-93J02-000	065	MAIN WIRING HARNESS	5.0m	–	2	2
	36620-93J52-000			6.5m	–	–	
	36620-93J62-000			8.0m	–	–	
	36620-94J01-000			6.5m	–	–	
	34200-93J12-000	013	TACHOMETER (FACE : WHITE)		–	2	
	34800-93J11-000	019	TRIM GAUGE (FACE : WHITE)		–	2	
④	67320-93J00-000	076	R/C CABLE (ORT THROTTLE AND SHIFT CABLES)	8ft. / 2.44m			4
	67320-93J10-000			10ft. / 3.05m			
	67320-93J20-000			12ft. / 3.66m			
	67320-93J30-000			14ft. / 4.27m			
	67320-93J40-000			16ft. / 4.88m			
	67320-93J50-000			18ft. / 5.49m			
	67320-93J60-000			20ft. / 6.10m			
	67320-93J70-000			22ft. / 6.71m			
	67320-93J80-000			24ft. / 7.32m			
	36620-93J10-000		MAIN WIRING HARNESS EXTENSION	2m		1	
	36620-93J40-000			3m			
	36621-96L00-000		HARNSS ASSY,DUAL KLS ENG		(*6)	(*7)	
	36663-96L10-000		WIRE COMP,KLS CAN EXT		(*6)	(*7)	
	36664-96L00-000		HARNSS ASSY,KLS CAN		(*6)	(*7)	
	37860-87L00-000	074	TROLL MODE SWITCH PANEL		*B		

*6, 7 part is required when using Suzuki Keyless Start System.
Kit number for Suzuki Keyless Start System *6 67000-93JE0-000 *7 67000-93JH0-000
These accessorries in yellow painted are optional ones. Please select your best one depending on your rigging system.

BINNACLE-MOUNT REMOTE CONTROL BOX

67200-93J13-000 059
for Single-Engine
Applicable Model DF8A-250

67200-93J23-000 060
for Dual-Engine
Applicable Model DF8A-250

FLUSH-MOUNT REMOTE CONTROL BOX

67200-93J32-000 061
for Single-Engine
Applicable Model DF8A-250

SIDE-MOUNT REMOTE CONTROL BOX

67200-94J20-000 062
for Single-Engine. With warning buzzer
Applicable Model DF8A-30A

67200-93J50-000
for Single-Engine. With PTT switch
Applicable Model DF9.9B-250

67200-91J20-000
for Single-Engine
Applicable Model DF4-6

67200-89E40-000
for Single-Engine. With warning buzzer
Applicable Model DT30/40W

SPACER KIT for REMOTE CONTROL BOX

67500-93J00-000 063
for Single Binnacle-mount type
Applicable Model DF8A-250

67500-93J10-000 064
for Dual Binnacle-mount type
Applicable Model DF8A-250

BATTERY LEAD

36625-93J10-000 066
6.7 meters
Applicable Model DF70-90A/150/175/200A/200-250

36625-93J00-000
3.9 meters
Applicable Model DF70-90A/150/175/200A/200-250

CONNECTION between ENGINE and CONTROL SYSTEM

MAIN WIRING HARNESS

36620-93J52-000
5.0 meters for Control system
Applicable Model DF40A-250

36620-94L00-000
6.5 meters for Control system
Applicable Model DF25A/30A

36620-93J02-000 065
6.5 meters for Control system
Applicable Model DF40A-250

36620-93J62-000
8.0 meters for Control system
Applicable Model DF40A-250

36620-94J01-000
6.5 meters for Control system without Monitor-signal wire, Trim-sender wire and PTT-SW wire
Applicable Model DF8A/9.9B/15A/20A

36620-94L10-000
6.5 meters for Control system without Trim-sender wire and PTT-SW wire
Applicable Model DF25A/30A

MAIN WIRING HARNESS EXTENSION

36620-93J10-000
2.0 meters for Control system
Applicable Model DF9.9B-250

36620-93J40-000
3.0 meters for Control system
Applicable Model DF9.9B-250

COMPONENT OF MECHANICAL REMOTE CONTROL SYSTEM

IGNITION SWITCH PANEL

37100-96J00-000 067
Single ignition
Applicable Model DF9.9B-250

37100-99E00-000
Single ignition
Applicable Model DT30

EMERGENCY SWITCH PANEL

37803-93J04-000 068
Applicable Model DF9.9B-300AP

37803-99E04-000
Applicable Model DT30

LIGHTING SWITCH PANEL

37210-93J00-000 073
Applicable Model DF9.9B-250, DT30/40W

IGNITION SWITCH PANEL

37100-96J24-000 069
Single ignition with
Emergency-stop switch
Applicable Model DF9.9B-250

IGNITION SWITCH PANEL

37100-96J14-000 070
Dual ignition with
Emergency-stop switch
Applicable Model DF9.9B-250

TROLL MODE SWITCH PANEL

37860-87L00-000 074
Applicable Model DF40A-140A/150TG/ZG/
175TG/ZG/200A/AP/250AP/
300AP
Activates SUZUKI Troll Mode System and controls RPM from idling engine speed up to 1200rpm at every 50rpm.

PTT SWITCH PANEL

37805-93J00-000 075
Applicable Model DF40A-250

WARNING BUZZER

38500-93J90-000 071
Applicable Model DF9.9B-300AP

TWIN REMOTE-CONTROL ATTACHMENT KIT

67140-95600-000 072
Applicable Model DF8A-250, DT30/40W

CLAMP BRACKET SET

41100-99J00-0EP
Applicable Model DF8A/9.9A

REMOTE-CONTROL CABLE

67320-93J00-000 076
8 feet 2.44 meters
Applicable Model DF4-250, DT30/40W

67320-93J10-000
10 feet 3.05 meters
Applicable Model DF4-250, DT30/40W

67320-93J20-000
12 feet 3.66 meters
Applicable Model DF4-250, DT30/40W

67320-93J30-000
14 feet 4.27 meters
Applicable Model DF4-250, DT30/40W

67320-93J40-000
16 feet 4.88 meters
Applicable Model DF4-250, DT30/40W

67320-93J50-000
18 feet 5.49 meters
Applicable Model DF4-250, DT30/40W

67320-93J60-000
20 feet 6.10 meters
Applicable Model DF4-250, DT30/40W

67320-93J70-000
22 feet 6.71 meters
Applicable Model DF4-250, DT30/40W

67320-93J80-000
24 feet 7.32 meters
Applicable Model DF4-250, DT30/40W

GENUINE REMOTE-CONTROL CABLES employ the latest in cable technology. The inner core is encased in nylon, and travels back and forth in a high-density polyethylene liner.

REMOTE-CONTROL ATTACHING KIT

Converts ME model to REMOTE-CONTROL model.

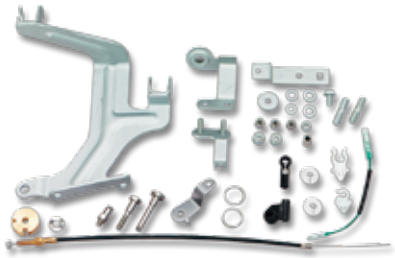

67101-91J00-000 077
Applicable Model DF4-6

67130-94L00-000
Applicable Model DF25A/30A

67130-94L10-000
Applicable Model DF25ATH/DF30ATH

67130-99J01-000
CLAMP BRACKET SET (41100-99J00-0EP) is required for installing 67130-99J00-000.
Applicable Model DF8A/9.9A

67130-89L03-000
Applicable Model DF9.9B/15A/20A

67130-91L00-0ED
Applicable Model DT25K/30

THRU-HULL-TUBE ATTACHMENT

67300-90J00-000
Applicable Model DF70A-90A

67300-93J00-000 078
Applicable Model DF200-250

HOSE ADAPTER KIT

KIT.A

67300-92J00-000 079
Applicable Model DF100A/115A/140A

67300-96L00-000 079
Applicable Model DF150TG/175TG, DF200AP

67300-96L10-000 079
Applicable Model DF150/175, DF200A

67300-98J00-000 079
Applicable Model DF250AP/300AP

KIT.B

67300-98J10-000 080
Applicable Model DF100A/115A/140A, DF150/175, DF150TG/175TG, DF200A, DF200AP

PART NUMBER	PART NAME	KIT A				KIT B
		67300-92J00-000	67300-96L00-000	67300-96L10-000	67300-98J00-000	67300-98J10-000
61124-92J10	GROMMET	1	–	–	–	–
61124-96J50		–	–	1	–	–
61124-96J60		–	1	–	–	–
61124-98J20		–	–	–	1	–
67361-90J10	ATTACHMENT	1	1	1	1	1
09208-06009	PIN	2	2	2	2	2
09383-04002	E RING	2	2	2	2	2

TILLER HANDLE KIT

63002-88L21-0EP 081
Applicable Model DF40A/50A

63002-88L11-0EP 082
Applicable Model DF60A/50AV/60AV

63002-87L12-0EP 083
Applicable Model DF70A-90A

63002-90J32-0EP 084
with Adjustable Steering Damper
Applicable Model DF100A/115A

Main features

Tachometer with warning indicators

Three-position angle adjustable bracket

Troll mode switch

- Activates SUZUKI Troll Mode System and controls RPM from idling engine speed up to 1200rpm at every 50rpm.

Power trim & tilt switch and throttle grip friction adjuster

TILLER HANDLE KIT

The conventional kits are also applicable.

63002-88L07-0EP 085

Applicable Model DF40A-60A

63002-87L04-0EP

Applicable Model DF70A-90A

DUAL-ENGINE TIE-BAR

67600-90J00-000 086

Stainless steel

Applicable Model DF100A-140A

67600-93J00-000

Stainless steel

Applicable Model DF150-250

STEERING EXTENSION KIT

67630-93J00-000 087

for installation of DUAL-ENGINE TIE-BAR (67600-93J00-000)

Applicable Model DF150-250

STEERING CABLE SEAL

41161-94400-000 090

Applicable Model DF8A-250, DT25K-40W

STEERING-BRACKET ATTACHMENT

43755-87L00-000 088

Applicable Model DF70A/90A

43755-88L00-0EP

Applicable Model DF40A-60A

43755-94L00-000

Applicable Model DF25A-30A

43755-99J00-000

Applicable Model DF8A-20A

43755-96320-000

Applicable Model DT25K/30/40W

DRAG-LINK KIT

67700-87L01-000 089

Applicable Model DF70A-90A

67700-93J00-000

Applicable Model DF40A-60A/200-250

67700-96J00-000

Applicable Model DF150-175/200A/AP

67701-87J11-000

Applicable Model DF40A-60A/200-250

67701-87L01-000

Applicable Model DF70A-90A

67701-90J01-000

Applicable Model DF100A-140A

67701-96J00-000

Applicable Model DF150-175/200A/AP

67701-94420-000

Applicable Model DT25K/30

67701-94L00-000

Applicable Model DF25A/30A

67701-99J02-000

Applicable Model DF8A-DF20A

ELECTRICAL PARTS

APPLICABLE MODEL	BATTERY CHARGING KIT ├ RECTIFIER SET └ RECEPTACLE KIT	ELECTRIC STARTER KIT
DF4/5/6	32000-91J13-000 ├ 32801-91J01-000 091 └ 39600-91J13-000 092	–
DF8A/9.9A	32000-99J00-000 ├ 32801-95J01-000 091 └ 39600-94J01-000 092	31000-99J01-000 093
DF9.9B/15A/20A	32000-89L00-000 ├ 32801-89L00-000 091 └ 39600-89L00-000 092	31000-89L04-000 093
DF25A/30A	32000-94L00-000 ├ 32800-88L00-000 091 ├ 39600-94L00-000 092 ├ 32815-94L00-000 (BRACKET) └ 01550-06207-000 (BOLT)	31000-94L02-000 093

RECTIFIER SET

091

RECEPTACLE KIT

092

ELECTRIC STARTER KIT

093

COUNTER SELECT CONNECTOR

36612-98J01-000 094

Applicable Model DF200AP/250AP/300AP

Converts DF300AP/250AP to counter rotation specification.

BATTERY ISOLATOR LEAD SET

33830-98J11-000

Applicable Model DF150T/Z/TG/ZG/175T/Z/TG/ZG/200A/AP/250AP/300AP

APPLICABLE MODEL	BATTERY CHARGING KIT (①+②+③)					ELECTRIC STARTER		
	① RECTIFIER SET	② RECEPTACLE SET	③ REGULATOR		QTY			QTY
DT9.9A/15A	32801-93903-000 091	39600-93910-000 092	32500-95722-000	REGULATOR ASSY, VOLTAGE	1	36740-93901-000	CASE ASSY, FUSE	1
			32590-93900-000	STAY, VOLTAGE REGULATOR	1	32102-90L20-000	FLYWHEEL COMP, MAGNETO	1
			02162-06127-000	SCREW, VOLTAGE REGULATOR	2	31101-93920-0ED	MOTOR SET, STARTING	1
			08310-00067-000	NUT, VOLTAGE REGULATOR	2	32200-93910-000	SET, LIGHTING COIL	1
			08321-01067-000	WASHER, VOLTAGE REGULATOR LOCK	2	32801-93903-000	RECTIFIER SET	1
			08322-01067-000	WASHER, VOLTAGE REGULATOR	2	33800-95L01-000	SET, STARTING CABLE & SWITCH	1
DT25K	32801-96304-000 091	39600-93910-000 092	32500-95722-000	REGULATOR ASSY, VOLTAGE	1			
			02162-06127-000	SCREW, VOLTAGE REGULATOR	2			
			08322-01067-000	WASHER, VOLTAGE REGULATOR	2			
DT30	32801-96304-000 091	39600-93910-000 092	32500-95722-000	REGULATOR ASSY, VOLTAGE	1	31101-96320-0EP	MOTOR SET, STARTING	1
			02162-06127-000	SCREW, VOLTAGE REGULATOR	2	32102-96462-000	FLYWHEEL COMP, MAGNETO	1
			08322-01067-000	WASHER, VOLTAGE REGULATOR	2	32801-96304-000	RECTIFIER SET	1
						33800-96304-000	SET, STARTING CABLE & SWITCH	1
						33815-94501-000	PROTECTOR, STARTER CABLE	1
						01550-06167-000	BOLT, CABLE PROTECTOR	1
DT40W	32801-94402-000 091	39600-93910-000 092				36740-93901-000	CASE ASSY, FUSE	1
						31101-94402-0ED	MOTOR SET, STARTING	1
						32102-92L00-000	FLYWHEEL COMP, MAGNETO	1
						32801-94402-000	RECTIFIER SET	1
						33800-94433-000	SET, STARTING CABLE & SWITCH	1

ANODE

ZINC ANODE for saltwater

55300-95500-000 095

Applicable Model DF8A/9.9A/40A-60A, DT25K-40W

55320-95311-000 096

Applicable Model DF40A-60A/150-300AP

55125-96310-000 097

Applicable Model DF25/R/Q

55321-90J01-000 098

Applicable Model DF50AV/60AV/100A-140A

ALUMINUM ANODE for brackish water, saltwater

55321-87J01-000 099

Applicable Model DF2.5-300AP, DT9.9AK/15AK

55320-94900-000 100

Applicable Model DF60A-300AP

55321-95J00-000 101

Applicable Model DF2.5

55321-93J01-000 102

Applicable Model DF150-300AP

MAGNESIUM ANODE for freshwater

55321-87J11-000 103

Applicable Model DF4-300AP,DT9.9A/15A

55321-94910-000 104

Applicable Model DF70A-300AP

FUEL SYSTEM

FUEL TANK

NOTE : These tanks do not meet US-EPA requirements.

65000-99100-000 105

12-liter plastic tank with no fuel-level gauge

Applicable Model DF4/5/6, DT9.9AK/15AK/25K/40WK (-K:For Gasoline)

65000-95D01-000 106

25-liter plastic tank with a fuel-level gauge

Applicable Model DF8A-140A, DT9.9AK-40W/WR/WK (-K:For kerosene)

65000-89L10-000

12-liter plastic tank

Applicable Model DF8A-20A

REPLACEMENT FUEL CAP

NOTE : These caps do not meet US-EPA requirements.

65520-99100-000

for 12-liter tank with no fuel-level gauge

Applicable Model DF5-20A/R,DT9.9AK/15AK/25K/40WK

65520-95D01-000

for 25-liter tank with a fuel-level gauge

Applicable Model DF8A-140A,DT9.9AK-40W/WR/WK

FUEL-HOSE SOCKET

65750-98505-000 107

Metal, Inner diameter: 11.2 mm

Applicable Model DF4-20A/R, DT9.9/K-40W/WR/WK

65750-87J11-000 108

Plastic, Inner diameter: 6.6 mm

Applicable Model DF4/8A-30A

65750-95500-000 109

Metal, Inner diameter: 13.0 mm

Applicable Model DF8A/R-140A, DT9.9AK-40W/WR/WK

FUEL SYSTEM

FUEL CONNECTOR (ENGINE SIDE)

65720-986B0-000 110

Plastic

Applicable Model DF4

FUEL CONNECTOR (TANK SIDE)

65740-95D01-000 111

Outer diameter: 13 mm, 1/4"NPT

Applicable Model DF8A/R-140A, DT9.9/K-40W/WR/WK

SQUEEZE PUMP

65770-99J01-000 112

Small-in & Large-out

Applicable Model DF4-6, DT9.9AK/15AK/25K/40WK

65770-90J11-000

Large-in & Large-out

Applicable Model DF8A-140A, DT9.9AK/15AK/25K/40WK

65770-93J11-000

Large-in & Large-out

Applicable Model DF150-300AP

65770-90L01-000

Large-in & Small-out

Applicable Model DT9.9A/15A/30/40W

SQUEEZE PUMP

(Meets US-EPA requirements.)

65770-94J02-000

Small-in & Large-out

Applicable Model DF4/6

65770-90J02-000

Large-in & Large-out

Applicable Model DF8A-25A/30A

65770-93J02-000

Large-in & Large-out

Applicable Model DF150-300AP

FUEL-HOSE COMPONENT

65700-94JD1-000

for 12-liter plastic tank to engine

Applicable Model DF4-6

65700-93J02-000 113

for fuel tank to engine

Applicable Model DF150-300AP

65700-87J15-000

for 25-liter plastic tank to engine

Applicable Model DF8A-20A

65700-90J14-000

for 25-liter plastic tank to engine

Applicable Model DF40A-140A

65700-95D04-000

for 12-liter plastic tank to engine (gasoline)

Applicable Model DT9.9AK/15AK/25K/40WK

65700-96362-000

for 25-liter plastic tank to engine (kerosene)

Applicable Model DT9.9AK/15AK/25K/40WK

65700-94416-000

with fuel filter (gasoline)

Applicable Model DT9.9AK/15AK/25K/40WK

65700-94433-000

with fuel filter (kerosene)

Applicable Model DT9.9AK/15AK

Only for P36 ver.

FUEL-HOSE COMPONENT

(Meets US-EPA requirements.)

65700-91J25-000

Applicable Model DF4/6

65700-87J25-000

Applicable Model DF8A-25

65700-88L03-000

Applicable Model DF40A-60A

65700-90J20-000

Applicable Model DF115A

FUEL-HOSE COMPONENT Chart

Engine Side (Outlet) | Tank Side (Inlet)

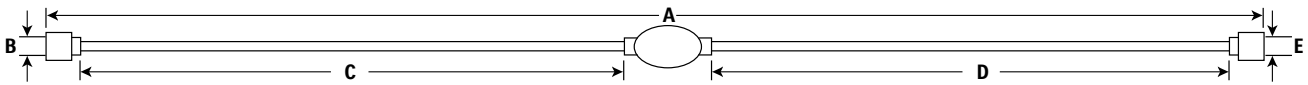

FUEL HOSE COMPONENT		SOCKET			HOSE				SQUEEZE PUMP	HOSE				SOCKET		
Part Number	A Length (mm)	Material	B I/D (mm)	Part Number	C Length (mm)		I/D (mm)	O/D (mm)		D Length (mm)		I/D (mm)	O/D (mm)	Material	E I/D (mm)	Part Number
65700-94JD1-000	1970	Plastic	6.6	65750-87J11-000	700	Large	7.3	12.5	65770-99J01-000	1100	Small	5.3	10.5	Metal	11.2	65750-98505-000
65700-93J02-000	2370	(no socket)	-	-	(no hose)	-	-	-	65770-93J11-000	2250	Large	9.0	14.0	(no socket)	-	-
65700-87J15-000	1970	Plastic	6.6	65750-87J11-000	700		7.3	12.5	65770-90J11-000	1100		7.3	12.5	Metal	13.0	65750-95500-000
65700-90J14-000	1250	(no socket)	-	-	(no hose)	-	-	-	65770-90J11-000	1100		7.3	12.5	Metal	13.0	65750-95500-000
65700-95D04-000	2550	Metal	13.0	65750-95500-000	300		7.3	12.5	65770-99J01-000	2090		5.3	10.5	Metal	11.2	65750-98505-000
65700-96362-000	2620	Metal	11.2	65750-98505-000	300		5.3	10.5	-	2250		7.3	12.5	Metal	13.0	65750-95500-000
65700-94415-000	3100	Metal	13.0	65750-95500-000	300		7.3	12.5	65770-90J11-000	2600		7.3	12.5	-	-	-
65700-94433-000	3100	Plastic	13.8	65750-94404-000	3000		7.3	12.5	-	-		-	-	-	-	-
65700-91J25-000	2000	Plastic	6.6	65750-87J11-000	700		7.3	12.5	65770-94J02-000	1100		5.3	10.5	Metal	11.2	65750-98505-000
65700-87J25-000	2000	Plastic	6.6	65750-87J11-000	700		7.3	12.5	65770-90J02-000	1100		7.3	12.5	Metal	13.0	65750-95500-000
65700-88L03-000	1280	(no socket)	-	-	(no hose)	-	-	-	65770-90J02-000	1100		7.3	12.5	Metal	13.0	65750-95500-000

WATER SEPARATOR / FUEL FILTER

65900-98J00-000 114

Applicable Model DF5/DF8A-300AP, DT9.9A -40W/WR/WK

ELEMENT SET

65910-98J00-000 115

Applicable Model DF5/DF8A-300AP, DT9.9A -40W/WR/WK

PROPELLER

What is PROPELLER

Propeller selection is very important in the performance of your boat. Acceleration, speed, fuel efficiency, stability and engine RPM all are affected by the propeller selected. Operating requirements and conditions will also affect which design, style and pitch of propeller you may choose to meet your individual needs. The boat and engine combination may have already been tested by your dealer or the boat manufacturer for the appropriate propeller size. Your Suzuki Dealer can assist you with the process to determine the correct propeller for your application.

Stainless Steel Propellers

Suzuki Stainless Steel Propellers offer higher performance and greater durability than aluminum propellers. The aggressive design of these propellers enhances the overall performance of your boat and the durability of the stainless steel construction will give you long term dependability. Your Suzuki Stainless Steel propeller is also fitted with a rubber cushion hub to help absorb vibration and shock should you strike a foreign object.

Propeller Sizing

When referring to propeller size, such as 3 x 13 x 18, the first number is the number of blade, the second number details the diameter of the propeller and the third number is the pitch of the propeller.

The pitch is the most significant number in the description. The diameter is usually predetermined by the propeller engineers and is based on the size and series of the engine.

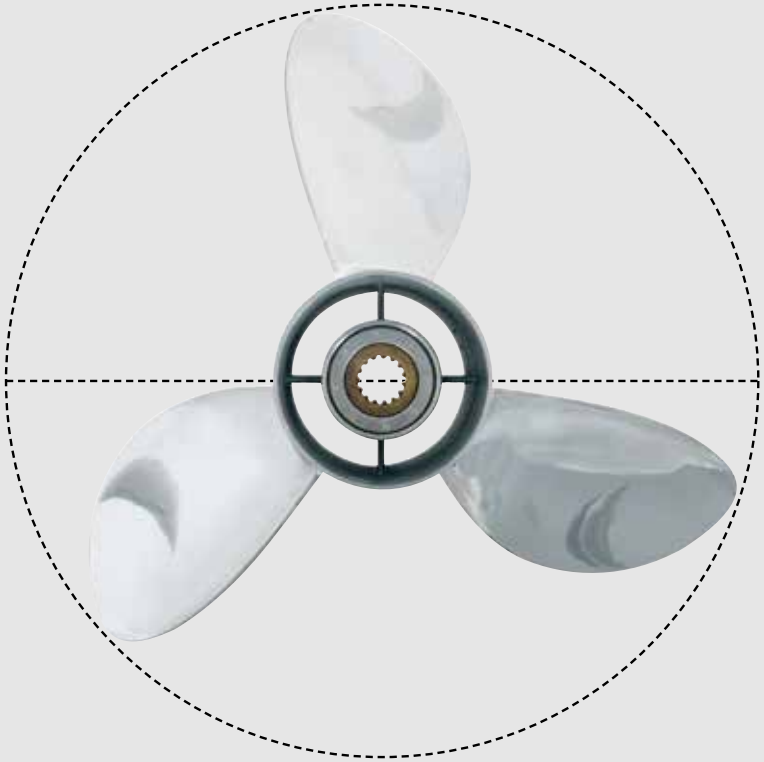

diameter

Diameter

Diameter is considered to be the distance across an imaginary circle that is made when a propeller is rotated. Diameter is determined during the engineering process of designing a propeller and is usually based on requirements to meet the needs of engine size, gear case design, horsepower and speed.

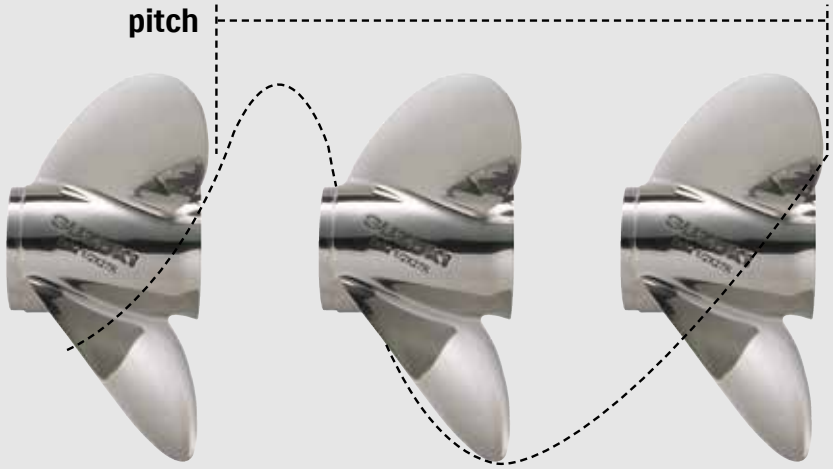

Pitch

Pitch is used to describe the theoretical distance that a propeller "cork screws" through the water in inches of forward travel. In theory, an 18" pitch propeller would move ahead 18" with each complete revolution of a propeller. There is always some percentage of inefficiency as water conditions, boat weight and propeller style are introduced into the performance equation. The lower the "slip factor," the more efficiently the propeller will perform and the faster the speed at a given engine RPM. Lower pitches accelerate faster, but have a lower top end speed. Higher pitches have a slower acceleration, but may attain higher top speeds. An inch of pitch generally is equal to 150-200 engine RPM at wide open throttle (WOT). If pitch is increased by an inch, RPM will decrease by 150-200 RPM at WOT. If pitch is decreased by an inch, RPM will increase by 150-200 RPM at WOT. Always operate your boat/engine combination within the recommended RPM range guidelines as stated in your operator's manual. Operating outside the recommended range can cause severe damage to your engine and may void the engine warranty.

Propeller Cup

Cup is used to reduce the slip and ventilation of the propeller. This will allow you to operate your engine at a higher transom mounting and allow you to use more trim for bow lift. The cup refers to the area along the trailing edge of the propeller blade that has an increased pitch in the last 1/2" of the blade surface and extends to the blade tip.

Rake

Rake is described as the angle, in degrees, that the propeller blades are mounted to the "barrel" of the propeller. The blades of a zero degree rake propeller are mounted perpendicular to the "barrel" of the propeller. The blades of a higher rake propeller angle more to the rear of the propeller. A propeller with a high rake design will hold the water on the blades longer during operation and will ventilate less at higher engine heights. High rake propellers will produce higher thrust that will help lift the bow of the boat more effectively.

HARDWARE FOR PROPELLER

Applicable Model	STOPPER		PROPELLER BUSH		HARDWARE KIT	Contents of HARDWARE KIT			
		SPACER				SPACER	WASHER	NUT	COTTER PIN
DF2.5	57635-91JL0-000	-	58120-97JA0-000	Press-In	N/A	-	-	58130-91JL0-000	09204-03003-000
DF4/5/6	57635-91JL0-000	-	58120-91JL0-000	Press-In	N/A	-	-	58130-91JL0-000	09204-03003-000
DF8A/9.9A	57632-94J00-000	-	58120-93701-000	Press-In	N/A	-	09160-12066-000	09141-12005-000	09204-02004-000
DF9.9B/15A/20A, DT9.9A/15A	57632-94J00-000	-	58120-89L00-000	Press-In	N/A	-	09160-12066-000	09141-12005-000	09204-02004-000
DF25	57632-95J00-000	-	58120-96401-000	Press-In	57630-96300-000	57633-96300-000	09160-14028-000	09141-14008-000	09204-03003-000
DT25/30	57632-91L00-000	-	58120-96401-000	Press-In	57630-96300-000	57633-96300-000	09160-14028-000	09141-14008-000	09204-03003-000
DT40	57632-92L00-000	-	58120-88L01-000	Press-In	57630-94300-000	57633-94300-000	09160-18028-000	09141-18005-000	09204-03003-000
DF40A/50A/60A	57632-95320-000	-	58120-88L01-000	Press-In	57630-94300-000	57633-94300-000	09160-18028-000	09141-18005-000	09204-03003-000
DF50AV/60AV	57635-90J01-000	-	58105-90J00-000 *1	Press-In	57630-94500-000	57633-90J02-000	09160-18028-000	09141-18005-000	09204-03003-000
DF70A/80A/90A	57632-87L01-000	-	58105-90J00-000 *1 58120-90J00-000 *2	Press-In	57630-90J00-000	57633-90J02-000	09160-18028-000	09141-18005-000	09204-03003-000
DF100A/115A T model (Right-Hand-Rotation)	57635-90J01-000	57632-90J00-000			57630-90J00-000	57633-90J02-000	09160-18028-000	09141-18005-000	09204-03003-000
DF115A Z model (Counter-Rotation)	57635-92J01-000	-			57630-90J00-000	57633-90J02-000	09160-18028-000	09141-18005-000	09204-03003-000
DF140A	57635-92J01-000	-			57630-90J00-000	57633-90J02-000	09160-18028-000	09141-18005-000	09204-03003-000
DF150-300AP	57632-93L01-000	-	58105-93J00-000 *3 58105-93J10-000 *4	Press-In	57630-92E00-000	57633-87D30-000	09160-18028-000	09141-18005-000	09204-03003-000

*1 58105-90J00 is for **58100-87Lxx, 58100-90Jxx, 58200-92J4x~92J9x and 58200-92JAx~92JDx.** *2 58120-90J00 is for **58200-90J0x~90J3x and 58200-92J0x~92J3x.** *3 58105-93J00 is for **58200-96Jxx.**
*4 58105-93J10 is for **58200-93Jxx, 58200-93Lxx and 58300-93Jxx.**
These bold letters indicate a proper part number in P34 & 35. Please refer to next pages.

PROPELLER

Model	Type	Material	Blade	Diamater	Pitch	Rotation*	Description	Part number
DF2.5	A520	Aluminum	3	7 3/8	5 3/8	RR		58110-97JA0-019
DF4	C601	Aluminum	3	7 1/2	6	RR		58110-91JL0-019
DF5	C611	Aluminum	3	7 1/2	6 1/2	RR		58110-91JM0-019
DF6	C701	Aluminum	3	7 1/2	7	RR		58110-91JN0-019
DF8A	M701	Aluminum	3	9 1/4	7	RR		58100-89L00-019
DF9.9A	M821	Aluminum	3	9 1/4	8	RR	THICK	58100-90L40-019
	M901	Aluminum	3	9 1/4	9	RR		58100-89L20-019
	M911	Aluminum	3	9 1/4	9	RR	THICK	58100-90L50-019
	M1001	Aluminum	3	9 1/4	10	RR		58100-89L30-019
	M1011	Aluminum	3	9 1/4	10	RR	THICK	58100-90L21-019
	M1101	Aluminum	3	9 1/4	11	RR		58100-89L40-019
DF9.9B		Aluminum	4	10	5	RR	High thrust	58100-94JA1-019
DF15A		Aluminum	3	9 1/4	7	RR		58100-89L00-019
DF20A		Aluminum	3	9 1/4	8	RR	THICK	58100-90L40-019
		Aluminum	3	9 1/4	9	RR		58100-89L20-019
DT9.9A		Aluminum	3	9 1/4	9	RR	THICK	58100-90L50-019
DT15A		Aluminum	3	9 1/4	10	RR		58100-89L30-019
		Aluminum	3	9 1/4	10	RR	THICK	58100-90L60-019
		Aluminum	3	9 1/4	11	RR		58100-89L40-019
		Aluminum	3	9 1/4	12	RR		58100-89L50-019
DF25	P911	Aluminum	3	10 1/4	9	RR	THICK	58100-96371-019
DT25	P1001	Aluminum	3	10 1/4	10	RR		58100-96411-019
DT30	P1011	Aluminum	3	10 1/4	10	RR	THICK	58100-96472-019
DF25A	P1101	Aluminum	3	10 1/4	11	RR		58100-96421-019
DF30A	P1201	Aluminum	3	10 1/4	12	RR		58100-91L20-019
	P1211	Aluminum	3	10 1/4	12	RR	THICK	58100-96481-019
	P1301	Aluminum	3	10 1/4	13	RR		58100-91L30-019
	P1311	Aluminum	3	10 1/4	13	RR	THICK	58100-96491-019
	P1401	Aluminum	3	10 1/4	14	RR		58100-95D01-019
	P1501	Aluminum	3	10 1/4	15	RR		58100-96461-019

*RR:Right-Hand-Rotation model, CR:Counter-Rotation model

Model	Type	Material	Blade	Diamater	Pitch	Rotation*	Description	Part number
DF40A	S900	Aluminum	3	11 1/2	9	RR		58100-88L03-019
DF50A	S1000	Aluminum	3	11 1/2	10	RR		58100-88L13-019
DF60A	S1100	Aluminum	3	11 1/2	11	RR		58100-88L23-019
DT40	S1200	Aluminum	3	11 5/8	12	RR		58100-88LA0-019
	S1301	Aluminum	3	11 1/2	13	RR		58100-88LB0-019
	S1400	Aluminum	3	11 3/8	14	RR		58100-88L52-019
	S1500	Aluminum	3	11 1/4	15	RR		58100-88L62-019
	S1600	Aluminum	3	11 1/8	16	RR		58100-88L72-019
	S1700	Aluminum	3	11	17	RR		58100-88L83-019
	SS1600	Stainless	3	11 1/8	16	RR		58200-88L30-000
DF50AV		Aluminum	3	14	9	RR		58100-87LG1-019
DF60AV		Aluminum	3	14	11	RR		58100-87LH0-019
		Aluminum	3	13 3/4	12	RR		58100-87LJ0-019
		Aluminum	3	14	13	RR		58100-87LA0-019
		Aluminum	3	13 7/8	15	RR		58100-87LB0-019
		Aluminum	3	13 3/4	17	RR		58100-87LC0-019
DF70A		Aluminum	3	14	13	RR		58100-87LA0-019
DF80A		Aluminum	3	13 7/8	15	RR		58100-87LB0-019
		Aluminum	3	13 3/4	17	RR		58100-87LC0-019
DF90A		Aluminum	3	13 3/4	19	RR		58100-87LD0-019
		Aluminum	3	13 3/4	21	RR		58100-87LE0-019
		Aluminum	3	13 3/4	23	RR		58100-87LF0-019
		Aluminum	3	13 1/2	15	RR		58100-90JE0-019
		Aluminum	3	14	17	RR		58100-90JA0-019
		Aluminum	3	14	19	RR		58100-90JB0-019
		Aluminum	3	14	21	RR		58100-90JC0-019
		Aluminum	3	14	23	RR		58100-90JD0-019
		Stainless	3	13 7/8	15	RR		58200-92J40-000
		Stainless	3	13 7/8	17	RR		58200-92J50-000
		Stainless	3	13 7/8	19	RR		58200-92J60-000
		Stainless	3	13 7/8	21	RR		58200-92J70-000
		Stainless	3	13 7/8	23	RR		58200-92J80-000
		Stainless	3	13 7/8	25	RR		58200-92J90-000

Model	Type	Material	Blade	Diamater	Pitch	Rotation*	Description	Part number
DF100A		Aluminum	3	13 1/2	15	RR		58100-90JE0-019
DF115A		Aluminum	3	14	17	RR		58100-90JA0-019
DF140A		Aluminum	3	14	19	RR		58100-90JB0-019
		Aluminum	3	14	21	RR		58100-90JC0-019
		Aluminum	3	14	23	RR		58100-90JD0-019
		Stainless	3	13 7/8	15	RR		58200-92J40-000
		Stainless	3	13 7/8	17	RR		58200-92J50-000
		Stainless	3	13 7/8	19	RR		58200-92J60-000
		Stainless	3	13 7/8	21	RR		58200-92J70-000
		Stainless	3	13 7/8	23	RR		58200-92J80-000
		Stainless	3	13 7/8	25	RR		58200-92J90-000
		Stainless	3	13 7/8	17	CR		58200-92JA0-000
		Stainless	3	13 7/8	19	CR		58200-92JB0-000
		Stainless	3	13 7/8	21	CR		58200-92JC0-000
		Stainless	3	13 7/8	23	CR		58200-92JD0-000

Model	Type	Material	Blade	Diamater	Pitch	Rotation*	Description	Part number
DF150		Stainless	3	16	15	RR		58200-93L80-000
DF175		Stainless	3	16	17	RR		58200-93L00-000
DF200		Stainless	3	16	18 1/2	RR		58200-93L10-000
DF225		Stainless	3	16	20	RR		58200-93L20-000
DF250		Stainless	3	16	21 1/2	RR		58200-93L30-000
DF250AP		Stainless	3	16	23	RR		58200-93L40-000
DF300AP		Stainless	3	16	24 1/2	RR		58200-93L50-000
		Stainless	3	16	26	RR		58200-93L60-000
		Stainless	3	16	27 1/2	RR		58200-93L70-000
		Stainless	3	16	17	CR		58200-93LE0-000
		Stainless	3	16	18 1/2	CR		58200-93LA0-000
		Stainless	3	16	20	CR		58200-93LB0-000
		Stainless	3	16	21 1/2	CR		58200-93LC0-000
		Stainless	3	16	23	CR		58200-93LD0-000
		Stainless	3	16	24 1/2	CR		58200-93LF0-000
		Stainless	3	16	26	CR		58200-93LG0-000
		Stainless	3	15 1/2	17	RR		58200-96J00-000
		Stainless	3	15 1/4	19	RR		58200-96J10-000
		Stainless	3	15	21	RR		58200-96J20-000
		Stainless	3	14 3/4	23	RR		58200-96J30-000
		Stainless	3	14 1/2	25	RR		58200-96J40-000
		Stainless	3	14 1/2	27	RR		58200-96J50-000
		Stainless	3	14 1/2	17	CR		58200-96JA0-000
		Stainless	3	15 1/4	19	CR		58200-96JB0-000
		Stainless	3	15	21	CR		58200-96JC0-000
		Stainless	3	14 3/4	23	CR		58200-96JD0-000
		Stainless	3	14 1/2	25	CR		58200-96JE0-000
		Stainless	3	14 1/2	27	CR		58200-96JF0-000
		Stainless	4	15 1/4	18	RR		58300-93J00-000
		Stainless	4	15 1/4	20	RR		58300-93J10-000
		Stainless	4	15 1/4	22	RR		58300-93J20-000
		Stainless	4	15 1/4	24	RR		58300-93J30-000
		Stainless	4	15 1/4	26	RR		58300-93J40-000
		Stainless	4	15 1/4	20	CR		58300-93JA0-000
		Stainless	4	15 1/4	22	CR		58300-93JB0-000
		Stainless	4	15 1/4	24	CR		58300-93JC0-000
		Stainless	4	15 1/4	26	CR		58300-93JD0-000

APPLICATION CHART

		DF300AP	DF250AP	DF250			DF225		DF200		DF200AP	DF200A		DF175				DF150					DF140A		DF115A			DF100A	DF90A		DF80A	DF70A		DF60A		
ITEM	**PAGE**	DF300AP	DF250AP	DF250ST	DF250T	DF250Z	DF225T	DF225Z	DF200T	DF200Z	DF200AP	DF200AT	DF200AZ	DF175TG	DF175ZG	DF175T	DF175Z	DF150AS	DF150TG	DF150ZG	DF150T	DF150Z	DF140AT	DF140AZ	DF115AS	DF115AT	DF115AZ	DF100AT	DF90AT	DF90ATH	DF80AT	DF70AT	DF70ATH	DF60AT	DF60ATH	DF60AQH
SUZUKI MULTI-FUNCTION GAUGE	P.06	○	○	○	○	○	○	○	○	○	○	○	○	○	○	○	○	○	○	○	○	○	○	○	○	○	○	○	○		○	○		○		
SUZUKI KEYLESS START SYSTEM	P.12	○	○								○	○	○										○	○	○	○	○	○								
ANALOG INSTRUMENT	P.14-15			○	○	○	○	○	○	○		○	○			○	○	○			○	○	○	○	○	○	○	○	○		○	○		○		
ELECTRONIC THROTTLE AND SHIFT SYSTEM	P.16-19																																			
ELECTRONIC REMOTE CONTROL KIT	P.16-17	○	○								○			○	○				○	○																
ELECTRONIC REMOTE CONTROL BOX	P.16	○	○								○			○	○				○	○																
BATTERY LEAD	P.19	○	○								○			○	○				○	○																
MECHANICAL REMOTE CONTROL SYSTEM	P.20-23																																			
MECHANICAL REMOTE CONTROL KIT	P.20			○	○	○	○	○	○	○		○	○			○	○	○			○	○	○	○	○	○	○	○	○		○	○		○		
MECHANICAL REMOTE CONTROL BOX	P.21			○	○	○	○	○	○	○		○	○			○	○	○			○	○	○	○	○	○	○	○	○		○	○		○		
BATTERY LEAD	P.21			○	○	○	○	○	○	○		○	○			○	○	○			○	○	○	○	○	○	○	○	○	○	○	○	○			
REMOTE-CONTROL CABLE	P.23			○	○	○	○	○	○	○		○	○			○	○	○			○	○	○	○	○	○	○	○	○		○	○		○		
REMOTE-CONTROL ATTACHING KIT	P.23																																			
STEERING	P.24-25																																			
TILLER HANDLE KIT	P.24																									○		○	○		○	○		○		
DUAL-ENGINE TIE-BAR	P.25			○	○	○	○	○	○	○	○	○	○	○	○	○	○	○	○	○	○	○	○	○	○	○	○	○								
STEERING EXTENSION KIT	P.25			○	○	○	○	○	○	○	○	○	○	○	○	○	○	○	○	○	○	○	○	○	○	○	○	○								
STEERING-BRACKET ATTACHIMENT	P.25																													○			○		○	○
DLUG-LINK KIT	P.25			○	○	○	○	○	○	○	○	○	○	○	○	○	○	○	○	○	○	○	○	○	○	○	○	○	○		○	○		○		
ELECTRICAL PARTS	P.26																																			
COUNTER SELECT CONNECTOR	P.26	○	○								○																									
BATTERY ISOLATOR LEAD SET	P.26	○	○								○	○	○	○	○	○	○	○	○	○	○	○														
ELECTRIC STARTER KIT (ONLY FOR MZ type)	P.26																																			
BATTERY CHARGING KIT (ONLY FOR MZ type)	P.26																																			
RECTIFIER SET (ONLY FOR MZ type)	P.26																																			
RECEPTACLE KIT (ONLY FOR MZ type)	P.26																																			
ANODE	P.27	○	○	○	○	○	○	○	○	○	○	○	○	○	○	○	○	○	○	○	○	○	○	○	○	○	○	○	○	○	○	○	○	○	○	○
FUEL SYSTEM	P.27-29	○	○	○	○	○	○	○	○	○	○	○	○	○	○	○	○	○	○	○	○	○	○	○	○	○	○	○	○	○	○	○	○	○	○	○

DF60AV		DF50A			DF50AV		DF40A			DF40AS	DF30A				DF25A					DF20A				DF15A			DF9.9B				DF9.9A		DF8A		DF6	DF5	DF4	DF2.5	DF2	DT40			DT30		DT25	DT15A		DT9.9A	
DF60AV	DF60AVTH	DF50AT	DF50ATH	DF50AQH	DF50AV	DF50AVTH	DF40AT	DF40ATH	DF40AQH	DF40AST	DF30A	DF30AT	DF30ATH	DF30AQH	DF25A	DF25AR	DF25AT	DF25ATH	DF25AQH	DF20A	DF20AR	DF20AT	DF20ATH	DF15A	DF15AR	DF15ATH	DF9.9B	DF9.9BR	DF9.9BT	DF9.9BTH	DF9.9A	DF9.9AR	DF8A	DF8AR	DF6	DF5	DF4	DF2.5	DF2	DT40W	DT40WR	DT40WK	DT30	DT30R	DT25K	DT15A	DT15AK	DT9.9A	DT9.9AK
○		○			○		○			○		○	○			○	○				○	○			○			○	○																					
○		○			○		○			○		○	○			○	○				○	○			○			○	○			○		○								○			○					
○		○			○		○			○		○					○					○						○																					
○		○			○		○			○		○				○	○				○	○			○			○	○			○		○								○			○					
○		○			○		○			○		○				○	○				○	○			○			○	○			○		○								○			○					
											○		○	○	○			○	○	○			○	○		○	○			○	○		○		○	○	○			○		○	○		○					
○		○			○		○																																										
	○		○	○		○		○	○		○		○	○	○			○	○	○			○	○		○	○			○	○		○							○		○	○		○					
○		○			○		○			○		○				○	○				○	○			○			○	○			○		○								○			○					
											○			○	○	○			○	○	○			○	○		○	○			○	○	○	○																
											○			○	○	○			○	○	○			○	○		○	○			○	○	○	○	○	○	○												
											○			○	○	○			○	○	○			○	○		○	○			○	○	○	○	○	○	○			○	○	○	○	○	○				
											○			○	○	○			○	○	○			○	○		○	○			○	○	○	○	○	○	○			○	○	○	○	○	○	○	○	○	○
○	○	○	○	○	○	○	○	○	○	○	○	○	○	○	○	○	○	○	○	○	○	○	○	○	○	○	○	○	○	○	○	○	○	○	○	○	○	○	○	○	○	○	○	○	○	○	○	○	○
○	○	○	○	○	○	○	○	○	○	○	○	○	○	○	○	○	○	○	○	○	○	○	○	○	○	○	○	○	○	○	○	○	○	○	○	○	○	○	○	○	○	○	○	○	○	○	○	○	○

VERSATILE JACKET

Jacket with durability, wind breaking and semi-waterproof system is convenient for the activities on the ship.
The bottom of jacket is adjustable.
Outer layer: Nylon 100%
Inner layer: Polyester 100%

S: 99000-990X7-MHS **M: 99000-990X7-MHM**
L: 99000-990X7-MHL **XL: 99000-990X7-MHX**
XXL: 99000-990X7-MHB

116

FLEECE JACKET

Functional triple layered fleece jacket is very comfortable during your winter cruising. It is also convenient for the activities on the ship.
Outer layer: Polyester 100%
Middle layer: Polyurethane film
Inner layer: Polyester 100%

S: 99000-990X7-MJS M: 99000-990X7-MJM
L: 99000-990X7-MJL XL: 99000-990X7-MJX
XXL: 99000-990X7-MJB

117

RAIN SUIT (JACKET and PANTS)

The functional rain wear can protect you from rain intrusion and strong wind.
It is possible to adjust the size of the waist and bottom of the trouser. Additionally, hood can be installed on the inner side of the neck.
Outer layer: Nylon 100%
Inner layer: Polyester 100%

S: 99000-990X7-MKS **M: 99000-990X7-MKM**
L: 99000-990X7-MKL **XL: 99000-990X7-MKX**
XXL: 99000-990X7-MKB

118

ZIP HOODIE

Soft touch full zip hoodie with "SUZUKI MARINE" logo and double layered hood.
Cotton 100%

S: 99000-990X7-MES **M: 99000-990X7-MEM**
L: 99000-990X7-MEL **XL: 99000-990X7-MEX**

119

POLO SHIRT

Light tuck stitch polo shirt.
Hardly losing the shape can be used long time.
Polyester 65% Cotton 35%

S: 99000-990X7-MBS **M: 99000-990X7-MBM**
L: 99000-990X7-MBL **XL: 99000-990X7-MBX**
XXL: 99000-990X7-MBB

120

CREW NECK T-SHIRT (LONG SLEEVE)

Easy-to-wear long sleeve T-shirt can be used for all season.
Cotton 100%

S: 99000-990X7-MDS **L: 99000-990X7-MDL**

121

CREW NECK T-SHIRT

Soft material T-shirt printed "SUZUKI MARINE" logo.
High breathability and well absorbency material keeps you comfort.
Cotton 45% Polyester 55%

S: 99000-990X7-MAS **M: 99000-990X7-MAM**
L: 99000-990X7-MAL **XL: 99000-990X7-MAX**

122

SPORT SHIRT

Use new material "cool max" which has high absorbency and transpiration as five times as cotton. It is easy to take on and o with half zip style on the neck.
Polyester 100%

White
L: 99000-990X7-MFL

Blue
S: 99000-990X7-MGS
L: 99000-990X7-MGL

123

WHITE T-SHIRT

Simple white T-shirt with SUZUKI MARINE logo.
It gives you elegant and easy-to-touch impression.
Cotton 100%

S: 99000-990X7-MMS **M: 99000-990X7-MMM**
L: 99000-990X7-MML **XL: 99000-990X7-MMX**

124

MESH CAP

High breathability cap will be good for summer season.
Front: Cotton 100% Back: Polyester 100%

99000-990X7-MY1 125

CAP

Standard cap with "SUZUKI MARINE" logo. Simple design can be used for all situation.
Cotton 100%

99000-990X7-MY2 126

CAP & NECK CAPE

Functional cap with neck cape protects you from sunshine front and back side.
Also can be used as normal cap, when you take off the neck cape.
Nylon: 100%

99000-990X7-MY5

127

SUN VISOR

Sun visor with "SUZUKI MARINE" logo. Protect your face from strong sunshine.
Cotton 100%

99000-990X7-MY3 128

KNIT BEANIE

Knit cap with "SUZUKI MARINE" logo. Easy to carry in compact size. It is "Must-item" for the winter season.
Acryl 100%

99000-990X7-MY4 129

SUNGLASSES

Polarizing glasses is used to protect your eyes. Including a case and tool to adjust frame.
Frame: Aluminum Glass: plastic
***Not CE approved**

99000-990X7-MY7

130

BEAR DOLL

A cute bear doll wearing "SUZUKI MARINE" T-shirts made from soft material. It gives you a brief moment of healing. We express kindness and sincerity for the customer with this item.
Polyester 100%

99000-990X7-MY8 131

LIGHT GLOVES

Functional and useful glove for working on the boat.
Mesh material for quick drying is used to the back of the hand.
Anti-slip Suede material and adjustable buckle is used to the palm part.
Back: Polyester 100%
Palm: Polyurethane 100%

M: 99000-990X7-MLM
L: 99000-990X7-MLL
XL: 99000-990X7-MLX

132

FACE GUARD

Protect your face from heavy rain and wind on the boat.
Soft material on the part of the mouth and wind-protection -fleece material on the whole neck part are used. It gives you comfort and moisture-retaining property.
Outer layer: Polyester 100%
Middle layer: Polyurethane 100%
Inner layer: Polyester 100%

99000-990X7-MY6 133

CARE & MAINTENANCE ITEM

SUZUKI APPROVED GENUINE OIL

- Specialty designed oil for SUZUKI 2&4 stroke outboard motor.
- High quality 2stroke motor oil provide proper viscosity to be stability when temperature change and keep excellent oxidation.
- This 4 stroke outboard oil is formulated with special additives and high quality base oil.
- Outstanding performance for wear protection, viscosity stability, low volatility and excellent rust protection and corrosion.

* **Availability may differ in some regions. Please contact Thai Suzuki Motor Co, Ltd. for more information and making an order.**

2-STROKE ENGINE OIL "ULTIMATE"

Mineral, 1 liter, TC-W3

2-STROKE ENGINE OIL "PREMIUM"

Mineral, 1 liter, Equivalent to TC-W3

4-STROKE ENGINE OIL "PREMIUM"

SAE 10W-40, Mineral, SJ, Equivalent to FC-W

1 liter and 5 liter Bottles are available

SUZUKI APPROVED GENUINE OIL by MOTUL

These products are supplied directly by MOTUL. Please note that these oils are not available in some countries.
Please contact with local distributor of MOTUL.

Suzuki and MOTUL have been in partnership in MotoGP since 1988.
Extending this trusted relationship led to the development of new Suzuki Marine Oils.
These ranges of oils have excellent oxidation stability and provide outstanding rust protection under severe operating conditions.

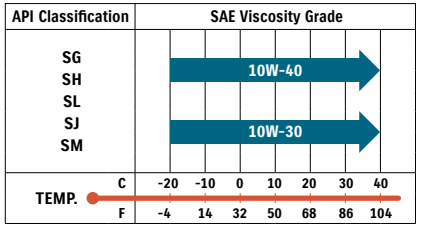

4-STROKE ENGINE OIL

SAE 10W-30 Semi-Synthetic

5 liter, FC-W

4-STROKE ENGINE OIL

SAE 10W-40 Semi-Synthetic

5 liter, FC-W

2-STROKE ENGINE OIL (TC-W3)

High Peformance 2T Engine OIL

1 liter, TC-W3

4-STROKE ENGINE OIL (10W-40)

SAE 10W-40 Mineral

1 liter, FC-W

GEAR OIL

SAE 90, API GL-5

0.35 liter

* 4 kinds (1L, 5L, 60L, 208L) of Engine oil volume and 3 kinds (0.35L, 1L, 60L) of Gear oil are available. Please ask your local MOTUL dealer.

ENGINE COVER

68110-89L00-000 134
Applicable Model DF8A-20A, DT9.9A-15A

68110-88L00-000 135
Applicable Model DF25/40A-60A, DT25/30

68110-87L00-000 136
Applicable Model DF70A-140A, DT40

68110-96J00-000 137
Applicable Model DF150T/Z-250T/Z

68110-98J00-000 138
Applicable Model DF250AP/300AP

68110-96110-000
Applicable Model DF4-20A

68110-94400-000 139
Applicable Model DF25

68110-94510-000
Applicable Model DF40A-60A

FLUSH-HOSE ATTACHMENT

55181-95200-000 140
Applicable Model DF4-6/40A-60A, DT40W

17917-87L00-000 141
Applicable Model DF8A-300A

2-CYCLE MOTOR OIL

99000-21B40-016 142
CCI OIL Metal can with a cap & nozzle

99000-21740-006 143
CCIS SUPER OIL Metal can with a cap & nozzle

GREASE

99000-25011-000 144
SUPER GREASE-A
450 grams (15.8 oz) for Crank oil seal

99000-25350-000 145
WATER RESISTANT GREASE EP2
250 grams (8.8 oz)

99000-25140-000 146
MOLY PASTE
50 grams (1.7 oz)

GEAR OIL

99000-22B22-000 147
HYPOID GEAR OIL SAE90 API GL-5
400ml

PTT FLUID

99000-22810-000 148
Metal can with a cap
1 liter

LIQUID GASKET

93691-80030-000 149
SILICONE SEAL KE45T
100 grams

99000-31140-000 150
1207B (BLACK)
100 grams (3.4 oz)

THREAD LOCK

99000-32020-000 151
1333B (RED)
50 grams (1.7 oz)

99000-32160-000 152
1342 (BLUE)
50 grams (1.7 oz)

SUZUKI MAINTENANCE KITS

SUZUKI highly recommends you to replace your outboard motor with Maintenance Kits every 100 hours or 1 year, whichever comes first.

ALL LINEUP For 2 STROKE OBM

MODEL / YEAR	KIT PART NUMBER	PART NUMBER	PART NAME	QTY
DT9.9/15 ('12)	17400-90830	17400-93912-000	CHROMED WATER PUMP REPAIR SET	1
		09168-10022-000	GASKET,10X17X1.5	2
		55321-90L00-000	ZINC,PROTECTION	3
		09204-02004-000	COTTER PIN	1
		09482-00533-000	SPARK PLUG,BR7HS-10	2
		17685-91D00-000	GASKET,THERMOSTAT COVER	1
DT9.9/15 (A) ('13~)	17400-90830	17400-90L01-000	WATER PUMP REPAIR SET	1
		59178-97J00-000	GASKET,DRAIN PLUG	2
		55321-87J00-000	ANODE,PROTECTION	1
		55321-90L00-000	ZINC,PROTECTION	2
		09204-02004-000	COTTER PIN	1
		09482-00533-000	SPARK PLUG,BR7HS-10	2
		17685-91D00-000	GASKET,THERMOSTAT COVER	1

MODEL / YEAR	KIT PART NUMBER	PART NUMBER	PART NAME	QTY
DT9.9K/15K ('12)	17400-90860	17400-93912-000	CHROMED WATER PUMP REPAIR SET	1
		09168-10022-000	GASKET,10X17X1.5	2
		55321-90L00-000	ZINC,PROTECTION	3
		09204-02004-000	COTTER PIN	1
		09482-00534-000	SPARK PLUG,B6HS	2
		17685-91D00-000	GASKET,THERMOSTAT COVER	1
DT9.9K/15K (A) ('13~)	17400-90840	17400-90L01-000	WATER PUMP REPAIR SET	1
		59178-97J00-000	GASKET,DRAIN PLUG	2
		55321-87J00-000	ANODE,PROTECTION	1
		55321-90L00-000	ZINC,PROTECTION	2
		09204-02004-000	COTTER PIN	1
		09482-00534-000	SPARK PLUG,BR6HS-10	2
		17685-91D00-000	GASKET,THERMOSTAT COVER	1
DT25K ('12)	17400-91840	17400-94412-000	KIT,WATER PUMP REPAIR	1
		09168-10022-000	GASKET,10X17X1.5	2
		09482-00532-000	SPARK PLUG,B7HS	2
		17685-96300-000	GASKET,THERMOSTAT COVER	1
		09204-03003-000	COTTER PIN,D:3.6,L:25	1
		55320-95311-000	ZINC SET, PROTECTION	1
DT25K ('13~14)	17400-91810	17400-94412-000	KIT,WATER PUMP REPAIR	1
		09168-10022-000	GASKET,10X17X1.5	2
		09482-00532-000	SPARK PLUG (NGK, B7HS-10)	2
		17685-96300-000	GASKET,THERMOSTAT COVER	1
		09204-03003-000	COTTER PIN,D:3.6,L:25	1
DT25K ('15~)	17400-91870	17400-94L10-000	KIT,WATER PUMP REPAIR	1
		59178-97J00-000	GASKET, DRAIN PLUG	2
		09482-00532-000	SPARK PLUG (B7HS-10)	2
		17685-96300-000	GASKET,THERMOSTAT COVER	1
		09204-03003-000	COTTER PIN,D:3.6,L:25	1
		55321-87J00-000	ANODE,PROTECTION	1
DT30 ('12)	17400-91850	17400-94412-000	KIT,WATER PUMP REPAIR	1
		09168-10022-000	GASKET,10X17X1.5	2
		09482-00533-000	SPARK PLUG,BR7HS-10	2
		17685-96300-000	GASKET,THERMOSTAT COVER	1
		09204-03003-000	COTTER PIN,D:3.6,L:25	1
		55320-95311-000	ZINC SET, PROTECTION	1
DT30 ('13~14)	17400-91820	17400-94412-000	KIT,WATER PUMP REPAIR	1
		09168-10022-000	GASKET,10X17X1.5	2
		09482-00533-000	SPARK PLUG (NGK, BR7HS-10)	2
		17685-96300-000	GASKET,THERMOSTAT COVER	1
		09204-03003-000	COTTER PIN,D:3.6,L:25	1
DT30 ('15~)	17400-91880	17400-94L10-000	KIT,WATER PUMP REPAIR	1
		59178-97J00-000	GASKET, DRAIN PLUG	2
		09482-00533-000	SPARK PLUG (BR7HS-10)	2
		17685-96300-000	GASKET,THERMOSTAT COVER	1
		09204-03003-000	COTTER PIN,D:3.6,L:25	1
		55321-87J00-000	ANODE,PROTECTION	1

MODEL / YEAR	KIT PART NUMBER	PART NUMBER	PART NAME	QTY
DT40W/40WR ('07LATE~'12)	17400-92830	17400-94412-000	KIT,WATER PUMP REPAIR	1
		09168-10022-000	GASKET,10X17X1.5	2
		09482-00370-000	PLUG,SPARK,BR8HS	2
		17685-94410-000	GASKET,THERMOSTAT COVER	1
		09204-03003-000	COTTER PIN,D:3.6,L:25	1
		55320-95311-000	ZINC SET, PROTECTION	1
DT40W/40WR ('13~)	17400-92810	17685-94410-000	GASKET,THERMOSTAT COVER	1
		09168-10022-000	GASKET,10X17X1.5	2
		09204-03003-000	COTTER PIN,D:3.6,L:25	1
		09482-00370-000	PLUG,SPARK,BR8HS	2
		17400-94412-000	KIT,WATER PUMP REPAIR	1

ALL LINEUP For 4 STROKE OBM

MODEL / YEAR	KIT PART NUMBER	PART NUMBER	PART NAME	QTY
DF2/2.5 ('06~'11)	17400-97820	17461-97JM0-000	IMPELLER,WATER PUMP	1
		09482-00406-000	SPARK PLUG, CR6HSA	1
		09204-02001-000	COTTER PIN	1
		09168-10022-000	GASKET,10X17X1.5	1
		59178-97J00-000	GASKET,DRAIN PLUG	2
		55321-87J00-000	ANODE,PROTECTION	1
		09280-33005-000	O RING	1
		09202-02006-000	PIN(2.9X14)	1
		17471-97J00-000	PANEL, PUMP CASE UNDER	1
		17472-97J00-000	GASKET, PUMP CASE PANEL	1
DF2/2.5 ('12~)	17400-97810	17461-97JM0-000	IMPELLER,WATER PUMP	1
		09482-00406-000	SPARK PLUG, CR6HSA	1
		09204-03003-000	COTTER PIN,D:3.6,L:25	1
		09168-10022-000	GASKET,10X17X1.5	1
		59178-97J00-000	GASKET,DRAIN PLUG	2
		55321-87J00-000	ANODE,PROTECTION	1
		09280-33005-000	O RING	1
		09202-02006	PIN	1
		17471-97JL0	UNDER PANEL	1
		17472-97JL0	GASKET	1
DF4/5/6 ('02~'10)	17400-91860	17400-986L0-000	KIT,WATER PUMP REPAIR	1
		09204-03003-000	COTTER PIN,D:3.6,L:25	1
		09482-00299-000	SPARK PLUG, BPR6ES	1
		09168-10022-000	GASKET,10X17X1.5	3
		55321-87J00-000	ANODE,PROTECTION	2
		17412-91JL0-000	PANEL, WATER PUMP CASE UPR	1
		17413-91JL0-000	SLEEVE, WATER PUMP CASE	1
		15410-98500-000	FUEL,FILTER	1

MODEL / YEAR	KIT PART NUMBER	PART NUMBER	PART NAME	QTY
DF4/5/6 ('11~)	17400-91830	17400-986L0-000	KIT,WATER PUMP REPAIR	1
		09204-03003-000	COTTER PIN,D:3.6,L:25	1
		09482-00L04-000	SPARK PLUG, CPR6EA-9	1
		09168-10022-000	GASKET,10X17X1.5	3
		55321-87J00-000	ANODE,PROTECTION	2
		17412-91JL0	PANEL	1
		17413-91JL0	SLEEVE	1
		15410-98500	FUEL,FILTER	1
DF8A/9.9A ('10~)	17400-99840	15410-98500-000	FILTER,FUEL	1
		16510-45H10-000	FILTER ASSY,ENG OIL	1
		09204-02004-000	COTTER PIN	1
		09280-54001-000	O RING(D:2.4,ID:52.6)	1
		09280-13004	O RING(D:1.9,ID:13)	1
		09168-12017-000	GASKET,12X17X1	1
		59178-97J00-000	GASKET,DRAIN PLUG	2
		55321-87J00-000	ANODE,PROTECTION	2
		09280-22019-000	O RING,D:1.9,ID:21.8	1
		09482-00528-000	SPARK PLUG, CR6E	2
		17400-99J01-000	KIT, WATER PUMP REPAIR	1
		17413-94J00	SLEEVE	1
DF9.9/15 ('11~'13)	17400-94810	17400-94J00-000	KIT, WATER PUMP REPAIR	1
		09204-02004-000	COTTER PIN	1
		09482-00L04-000	SPARK PLUG, CPR6EA-9	2
		16510-45H10-000	FILTER ASSY,ENG OIL	1
		09280-10013-000	O RING(D:2.4,ID:9.6)	1
		55321-99E00-000	ANODE,PROTECTION	1
		55321-90L00-000	ZINC,PROTECTION	1
		09168-12017-000	GASKET,12X17X1	1
		09168-10022-000	GASKET,10X17X1.5	2
		17413-94J00-000	SLEEVE, WATER PUMP CASE	1
		15410-98500-000	FUEL,FILTER	1
DF9.9B/15A/20A ('13~)	17400-89810	17400-99J01-000	KIT, WATER PUMP REPAIR	1
		09204-02004-000	COTTER PIN	1
		09482-00L04-000	SPARK PLUG, CPR6EA-9	2
		16510-45H10-000	FILTER ASSY,ENG OIL	1
		09280-13004-000	O RING(D:1.9,ID:13)	1
		09280-54001-000	O RING(D:2.4,ID:52.6)	1
		55321-87J00-000	ANODE,PROTECTION	2
		09280-22019-000	O RING,D:1.9,ID:21.8	1
		09168-12017-000	GASKET,12X17X1	1
		59178-97J00-000	GASKET,DRAIN PLUG	2
		17413-94J00	SLEEVE, WATER PUMP CASE	1
		15410-87L00	FUEL,FILTER	1

SUZUKI MAINTENANCE KITS

MODEL YEAR	KIT PART NUMBER	PART NUMBER	PART NAME	QTY
DF20/25 V2 ('06~)	17400-95870	17400-95J02-000	KIT,WATER PUMP REPAIR	1
		16510-87J00-000	FILTER ASSY,OIL	1
		09482-00427-000	SPARK PLUG, BKR6E	2
		09204-03003-000	COTTER PIN,D:3.6,L:25	1
		09168-10022-000	GASKET,10X17X1.5	2
		09168-12012-000	GASKET,12.5X20X2.5	1
		55321-95J00-000	ANODE,PROTECTION	2
		55321-87J00-000	ANODE,PROTECTION	5
		09280-10013-000	O RING D:2.4ID:9.6	2
		09280-22019-000	O RING D:1.9ID:21.8	1
		17413-95J00	SLEEVE	1
		15410-87J30	FUEL,FILTER	1
DF25/30 ('01~'10)	17400-89820	17400-96353-000	KIT,WATER PUMP REPAIR	1
		16510-87J00-000	FILTER ASSY,OIL	1
		09482-00446-000	SPARK PLUG, DCPR6E	3
		09204-03003-000	COTTER PIN,D:3.6,L:25	1
		09168-10022-000	GASKET,10X17X1.5	2
		09168-12012-000	GASKET,12.5X20X2.5	1
		55321-87J00-000	ANODE,PROTECTION	1
		11265-87E10-000	GASKET, PROTECTION COVER	1
		15410-87J10-000	FUEL,FILTER	1
DF25A/30A ('15~)	17400-94820	17400-94L00-000	KIT, WATER PUMP REPAIR	1
		09204-03003-000	COTTER PIN (D:3.6,L:25)	1
		09482-00L04-000	SPARK PLUG (CPR6EA-9)	3
		16510-87JL0-000	FILTER ASSY, OIL	1
		55321-87J00-000	ANODE,PROTECTION	5
		09280-22019-000	O RING (D:1.9,ID:21.8)	1
		09168-12017-000	GASKET (12X17X1)	1
		59178-97J00-000	GASKET,DRAIN PLUG	2
		17413-94L00-000	SLEEVE, WATER PUMP CASE	1
		15410-87L00-000	FUEL,FILTER	1
DF40/50 ('06LATE~'10)	17400-87820	17400-96353-000	KIT,WATER PUMP REPAIR	1
		16510-87J00-000	FILTER ASSY,OIL	1
		09482-00446-000	SPARK PLUG, DCPR6E	3
		09204-03003-000	COTTER PIN,D:3.6,L:25	1
		09168-10022-000	GASKET,10X17X1.5	2
		09168-12012-000	GASKET,12.5X20X2.5	1
		55321-87J00-000	ANODE,PROTECTION	2
		09280-22019-000	O RING,D:1.9,ID:21.8	2
		15410-87J30-000	FILTER,FUEL	1

MODEL YEAR	KIT PART NUMBER	PART NUMBER	PART NAME	QTY
DF40A/50A/60A ('10~)	17400-88810	17400-88L00-000	KIT,WATER PUMP REPAIR	1
		09204-03003-000	COTTER PIN,D:3.6,L:25	1
		16510-87J00-000	FILTER ASSY,OIL	1
		09482-00446-000	SPARK PLUG, DCPR6E	3
		09168-12012-000	GASKET,12.5X20X2.5	1
		09168-10022-000	GASKET,10X17X1.5	2
		55321-87J00-000	ANODE,PROTECTION	3
		09280-22019-000	O RING,D:1.9,ID:21.8	2
		15410-88L00-000	FILTER COMP,FUEL	1
DF50AV/60AV ('14~)	17400-88820	17400-99E10-000	KIT,WATER PUMP REPAIR	1
		09204-03003-000	COTTER PIN,D:3.6,L:25	1
		16510-87J00-000	FILTER ASSY,OIL	1
		09482-00446-000	SPARK PLUG, DCPR6E	3
		09168-12012-000	GASKET,12.5X20X2.5	1
		09168-10022-000	GASKET,10X17X1.5	2
		55321-87J00-000	ANODE,PROTECTION	3
		09280-22019-000	O RING,D:1.9,ID:21.8	2
		15410-88L00-000	FILTER COMP,FUEL	1
DF60 ('09LATE~'09END)	17400-99850	17400-99E10-000	KIT,WATER PUMP REPAIR	1
		16510-87J00-000	FILTER ASSY,OIL	1
		09482-00299-000	SPARK PLUG, BPR6ES	4
		09204-03003-000	COTTER PIN,D:3.6,L:25	1
		09168-10022-000	GASKET,10X17X1.5	2
		09168-12012-000	GASKET,12.5X20X2.5	1
		55321-87J00-000	ANODE,PROTECTION	1
		11265-87E10-000	GASKET, PROTECTION COVER	1
		17416-99E10-000	SEALING, WATER PUMP CASE	1
		17413-99E11-000	SLEEVE, WATER PUMP CASE	1
		15410-87J30-000	FILTER,FUEL	1
DF60/70 ('07)	17400-99870	17400-87E04-000	KIT,WATER PUMP REPAIR	1
		16510-87J00-000	FILTER ASSY,OIL	1
		09482-00299-000	SPARK PLUG, BPR6ES	4
		09204-03003-000	COTTER PIN,D:3.6,L:25	1
		09168-10022-000	GASKET,10X17X1.5	2
		09168-12012-000	GASKET,12.5X20X2.5	1
		55321-87J00-000	ANODE,PROTECTION	1
		11265-87E10-000	GASKET, PROTECTION COVER	1
		15410-87J30-000	FILTER,FUEL	1

MODEL / YEAR	KIT PART NUMBER	PART NUMBER	PART NAME	QTY
DF60/70 ('08~'09EARLY)	17400-99860	17400-99E01-000	KIT,WATER PUMP REPAIR	1
		16510-87J00-000	FILTER ASSY,OIL	1
		09482-00299-000	SPARK PLUG, BPR6ES	4
		09204-03003-000	COTTER PIN,D:3.6,L:25	1
		09168-10022-000	GASKET,10X17X1.5	2
		09168-12012-000	GASKET,12.5X20X2.5	1
		55321-87J00-000	ANODE,PROTECTION	1
		11265-87E10-000	GASKET, PROTECTION COVER	1
		17416-99E00-000	SEALING, WATER PUMP CASE NO1	1
		17413-99E11-000	SLEEVE, WATER PUMP CASE	1
		17417-99E00-000	SEALING, WATER PUMP CASE NO2	1
		15410-87J30-000	FILTER,FUEL	1
DF70A/80A/90A ('09~)	17400-87810	17400-87L01-000	KIT,WATER PUMP REPAIR	1
		16510-61A31-000	FILTER ASSY, OIL(WAKO)	1
		09482-00446-000	SPARK PLUG, DCPR6E	4
		09168-12012-000	GASKET,12.5X20X2.5	1
		09168-10034-000	GASKET,9.5X16.5X2	2
		55321-87J00-000	ANODE,PROTECTION	3
		09204-03003-000	COTTER PIN,D:3.6,L:25	1
		09280-22019-000	O RING,D:1.9,ID:21.8	3
		09420-04009	KEY,WATER PUMP	1
		15410-87L00	FUEL,FILTER	1
DF100/115 ('10~'12)	17400-92840	17400-92J21-000	KIT,WATER PUMP REPAIR	1
		16510-61A31-000	FILTER ASSY, OIL	1
		09482-00427-000	SPARK PLUG, BKR6E	4
		09204-03003-000	COTTER PIN,D:3.6,L:25	1
		09168-10022-000	GASKET,10X17X1.5	2
		09168-12012-000	GASKET,12.5X20X2.5	1
		55321-87J00-000	ANODE,PROTECTION	4
		11265-87E10-000	GASKET,PROTECTION COVER	2
		09280-22019-000	O RING,D:1.9,ID:21.8	2
		09420-05009-000	KEY,WATER PUMP	1
		15410-87J30-000	FILTER,FUEL	1
DF100A/115A/140A ('13~)	17400-92821	17400-92J21-000	KIT,WATER PUMP REPAIR	1
		16510-61A31-000	FILTER ASSY, OIL(WAKO)	1
		09482-00427-000	SPARK PLUG, BKR6E	4
		09204-03003-000	COTTER PIN,D:3.6,L:25	1
		09168-10022-000	GASKET,10X17X1.5	2
		09168-12012-000	GASKET,12.5X20X2.5	1
		55321-87J00-000	ANODE,PROTECTION	4
		11265-87E10-000	GASKET,PROTECTION COVER	2
		09280-22019-000	O RING,D:1.9,ID:21.8	2
		09420-05009-000	KEY,WATER PUMP	1
		15412-92J00-000	ELEMENT, FUEL FILTER	1

MODEL / YEAR	KIT PART NUMBER	PART NUMBER	PART NAME	QTY
DF140 ('10~'12)	17400-92850	17400-92J21-000	KIT,WATER PUMP REPAIR	1
		16510-61A31-000	FILTER ASSY, OIL	1
		09482-00427-000	SPARK PLUG, BKR6E	4
		09204-03003-000	COTTER PIN,D:3.6,L:25	1
		09168-10022-000	GASKET,10X17X1.5	2
		09168-12012-000	GASKET,12.5X20X2.5	1
		55321-87J00-000	ANODE,PROTECTION	4
		11265-87E10-000	GASKET,PROTECTION COVER	2
		09280-22019-000	O RING,D:1.9,ID:21.8	2
		09420-05009-000	KEY,WATER PUMP	1
		15410-87J30-000	FILTER,FUEL	1
		16621-73G00-000	GASKET,OIL COOLER	1
		09280-56005-000	O RING(D:3.53,ID:56.74)	1
		09280-60007-000	O RING(D:3.5,ID:59.6)	1
		09280-70002-000	O RING(D:3.1,ID:69.4)	1
DF150/175 ('06~)	17400-96821	17400-96J02-000	KIT,WATER PUMP REPAIR	1
		16510-96J00-000	FILTER ASSY,OIL	1
		09482-00427-000	SPARK PLUG, BKR6E	4
		09204-03003-000	COTTER PIN,D:3.6,L:25	1
		09168-10034-000	GASKET,9.5X16.5X2	2
		09168-12012-000	GASKET,12.5X20X2.5	1
		55321-87J00-000	ANODE,PROTECTION	6
		09280-22019-000	O RING,D:1.9,ID:21.8	5
		17413-96J01-000	SLEEVE,WATER PUMP CASE	1
		15410-96J00-000	FUEL,FILTER	1
DF200/225/250 ('11~)	17400-93851	17400-93J02-000	KIT,WATER PUMP REPAIR	1
		16510-96J00-000	FILTER ASSY,OIL	1
		09482-00427-000	SPARK PLUG, BKR6E	6
		09204-03003-000	COTTER PIN,D:3.6,L:25	1
		09168-10034-000	GASKET,9.5X16.5X2	2
		09168-12012-000	GASKET,12.5X20X2.5	1
		55321-87J00-000	ANODE,PROTECTION	7
		09280-22019-000	O RING,D:1.9,ID:21.8	7
		55320-94900-000	ANODE SET,CLAMP BRACKET	1
		17413-93J02-000	SLEEVE,WATER PUMP CASE	1
		15412-93J10-000	ELEMENT, FUEL FILTER	1
DF250A/300(A)/250S ('11~)	17400-98861	17400-98J01-000	KIT,WATER PUMP REPAIR	1
		16510-96J00-000	FILTER ASSY,OIL	1
		09482-00427-000	SPARK PLUG, BKR6E	6
		09204-03003-000	COTTER PIN,D:3.6,L:25	1
		09168-10034-000	GASKET,9.5X16.5X2	2
		09168-12012-000	GASKET,12.5X20X2.5	1
		55321-87J00-000	ANODE,PROTECTION	8
		09280-22019-000	O RING,D:1.9,ID:21.8	7
		17413-93J02-000	SLEEVE,WATER PUMP CASE	1
		55320-94900-000	ANODE SET,CLAMP BRACKET	1
		15412-93J10-000	ELEMENT, FUEL FILTER	1

Recommended STEERING SYSTEM supplied by SEASTAR SOLUTIONS® www.seastarsolutions.com

Order taking, delivery, technical support and warranty for these products are handled by SeaStar Solutions.
Please consult to local SeaStar Solutions distributor or dealer if you need more detail for product information, price, availability and all business terms.

STEERING KIT

BAYSTAR™

BAYSTAR

BAYSTAR OUTBOARD SYSTEM - HK4200A-3	
System comprises:	
BayStar Helm 1.4cu" (22.94cc)	HH4314-3
BayStar Compact Cylinder	HC4645H*
20ft "cut to length" tubing kit	HT4420H
2 x l litre hydraulic oil	HA5430

*Note: 115-140hp four stroke 2001 to current model require HC4658H.

BAYSTAR™ PLUS

BAYSTAR PLUS

BAYSTAR OUTBOARD SYSTEM - HK4330A-3	
System comprises:	
BayStar Helm 1.4cu" (22.94cc)	HH4514-3
BayStar Compact Cylinder	HC4645H*
2 x l litre SeaStar hydraulic oil	HA5430
Note: 1 x SeaStar hose kits must be ordered separately	

*Note: 115-140hp four stroke 2001 to current model require HC4658H.

SEASTAR™

SEASTAR

SEASTAR OUTBOARD SYSTEM - HK6400-3	
System comprises:	
SeaStar Helm 1.7cu" (27.80cc)	HH5271-3
SeaStar Pivot Cylinder	HC5345-3*
2 x l litre hydraulic oil	HA5430
Note: 1 x SeaStar hose kits must be ordered separately	

*Note: 115-140hp 1996 only requires HC5348, 40-140hp four stroke 1998 to current model and 90hp four stroke 2003 to current model require HC5358.

SEASTAR™ P/A

SEASTAR POWER ASSIST

SEASTAR OUTBOARD POWER ASSIST SYSTEM	
System comprises:	
SeaStar Helm 1.7cu" (27.80cc)	HH5271-3
SeaStar Pivot Cylinder	HC5345-3*
2 x l litre hydraulic oil	HA5430
SeaStar 12v Power Assist Unit	PA1200-2
Note: 2 x SeaStar hose kits must be ordered separately	

*Note: 115-140hp 1996 only requires HC5348, 40-140hp four stroke 1998 to current model and 90hp four stroke 2003 to current model require HC5358.

*For further application information please refer to www.seastarsolutions.com

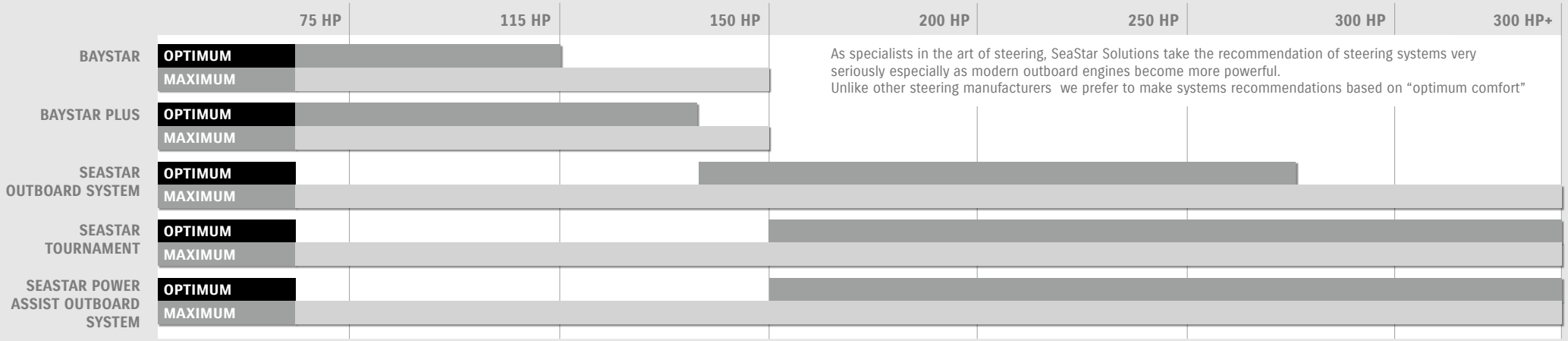

As specialists in the art of steering, SeaStar Solutions take the recommendation of steering systems very seriously especially as modern outboard engines become more powerful.
Unlike other steering manufacturers we prefer to make systems recommendations based on "optimum comfort"

OPTIMUS EPS

A Higher Level Of Engineering Sophistication

The patented Optimus 360 system builds on the Optimus EPS. The Optimus EPS system replaces the traditional hydraulic steering system. For single, twin, triple and quad engine applications.

Advantages of Optimus EPS

- No oil at helm
- Boat that steers like a sports car
- Plug and play autopilot compatibility
- No auto pilot pump or rudder feedback unit
- Adjustable speed sensitive wheel effort
- Adjustable speed sensitive turns lock to lock
- Can be retrofitted to existing mechanical and electronic controlled engines. You do not have to buy new engines
- No tie-bars (twin configuration)
- No liquid tie-bar (CAT)
- On demand pumps which extend battery life
- Components based on existing SeaStar reliability and quality
- NMEA 2000 Certified

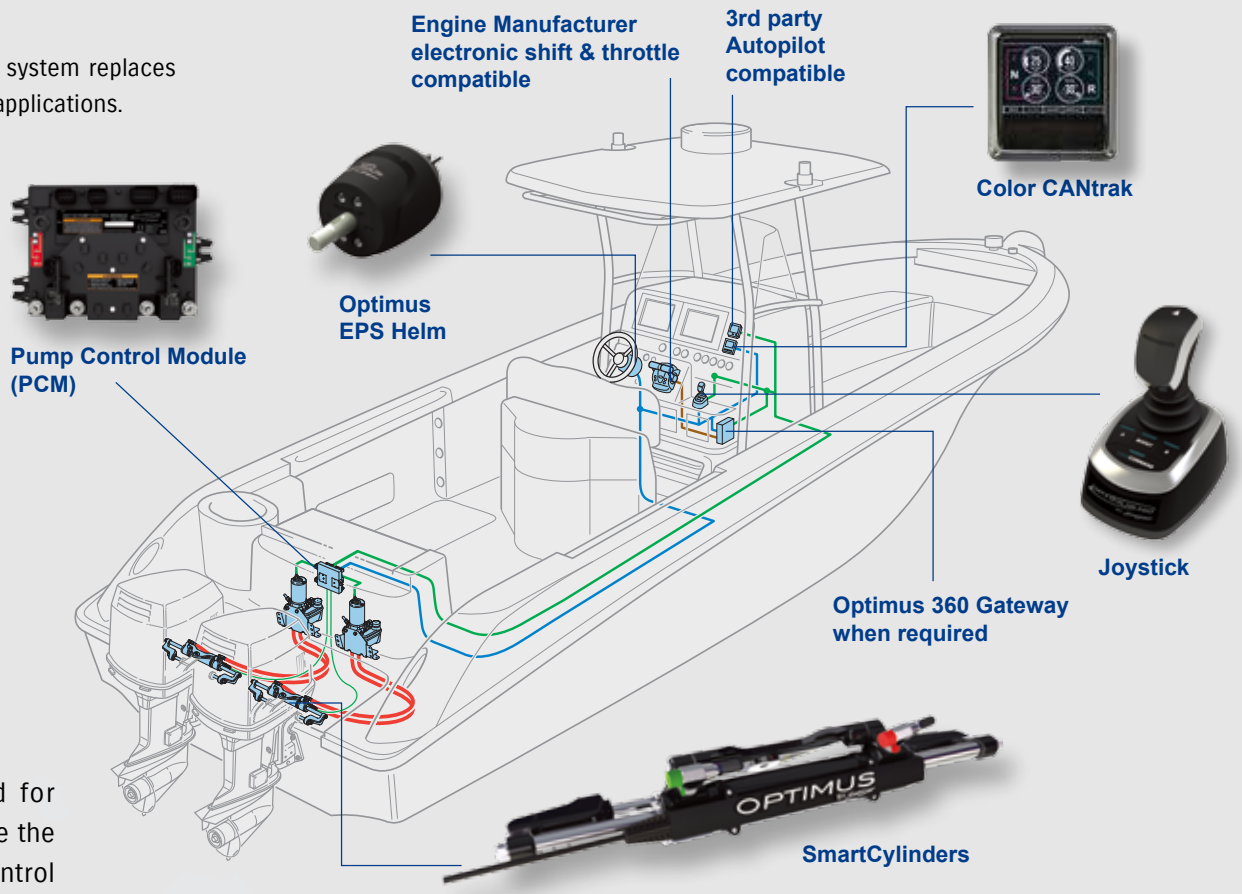

Optimus EPS + Joystick = Optimus 360 Joystick Control

OPTIMUS 360

Optimus 360 steering/shift/throttle control system is engineered for powerboats with electronic shift and throttle engines, allowing you to use the existing electronic controls. Optimus 360 connects to the existing control head with closed loop processing, providing a very seamless integration.

Advantages of Optimus 360

- Intuitive high precision Joystick docking with confidence
- Seamless integration with electronic controlled engines
- Autopilot ready - just a simple connection
- Dual station compatible
- Tiebar engines (triple) – less components, simple installation, less cost
- Available as a retrofit or for new engine installation
- All the benefits of Optimus EPS, including auto adjusting steering effort and steering turns lock to lock
- Supports Twin and Triple Suzuki Precision Control Engines

OPTIMUS 360 BY SEASTAR

AWARDS

Our outboards have received numerous awards for innovation. This success recognises our vast experience in developing technology (for motorcycles, ATVs and automobiles, as well as outboards) and precise understanding of our customers' needs.

Real Suzuki is built by Genuine Suzuki Parts and Accessories

Every Suzuki Product is built with Suzuki Genuine Accessories and Parts. They have the optimal design and specification tailored for the specific product and model. Every part has passed Suzuki's rigorous test standards for performance, quality, durability, safety and comfort. We recommend that you choose Suzuki Genuine Accessories and Parts when you need to repair your Suzuki or replace consumable parts such as filters, belt, etc.
Each genuine Accessories and Parts is the perfect match for your Suzuki Product!

HEAD OFFICE

MARINE TECHNICAL CENTER

SUZUKI MOTOR CORPORATION reserves the right to add any improvement to change the design or to discontinue any item at any time without notice. Some items might not be compatible with local standards or statutory requirements.
Please check with your local AUTHORIZED SUZUKI DEALER for details at the time of ordering. Actual colors might differ from those appearing in this catalog.
©2015 SUZUKI MOTOR CORPORATION. All rights reserved.
Printed and edited in Japan. Second edition December 2015. Part number: 99000-79N12-223

SUZUKI
SUZUKI MOTOR CORPORATION
300 TAKATSUKA-CHO, MINAMI-KU, HAMAMATSU CITY, JAPAN 432-8611

Your AUTHORIZED SUZUKI DEALER

BEFORE YOU SAIL OUT, CHECK YOUR MOTOR AND FUEL FOLLOWING THE OWNER'S MANUAL, AND WEAR PROPER ATTIRE.